TREATISE

CORNELIUS CARDEW

THE GALLERY UPSTAIRS PRESS
3400 MAIN STREET
BUFFALO, N.Y. 14214

THE GALLERY UPSTAIRS PRESS · BUFFALO, NEW YORK

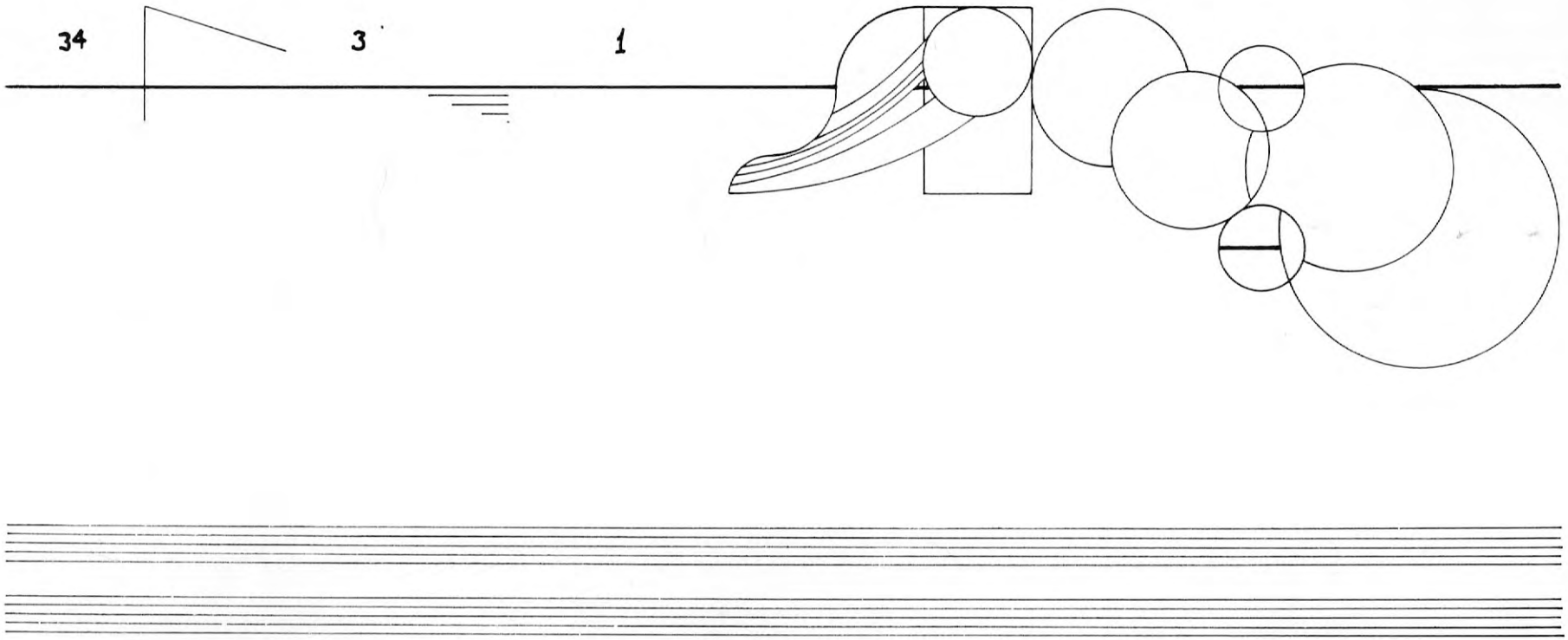

Exclusive rights and sole selling agents for Great Britain and Commonwealth (except Canada), and Europe: Hinrichsen Edition, Ltd., London.

© 1967: GALLERY UPSTAIRS PRESS, BUFFALO, N.Y., U.S.A.

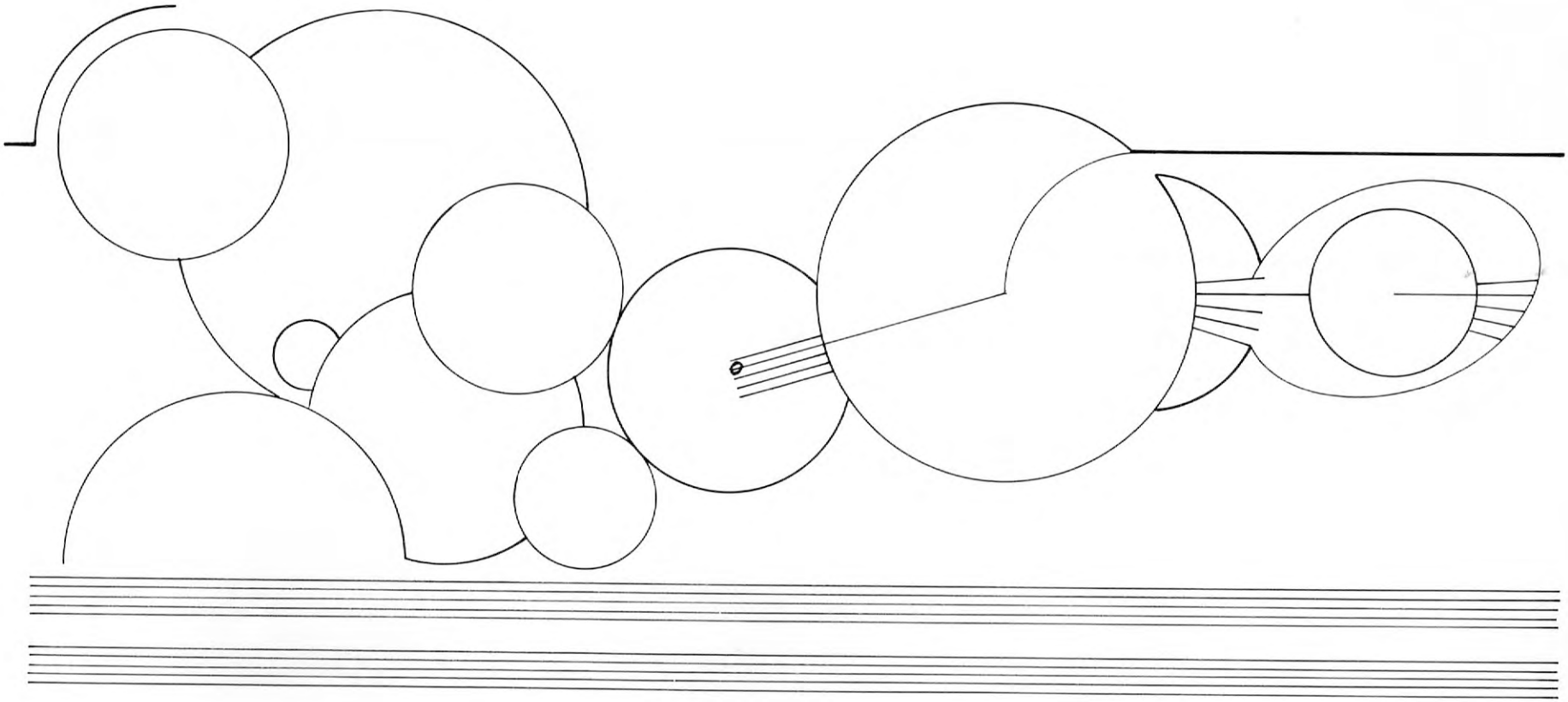

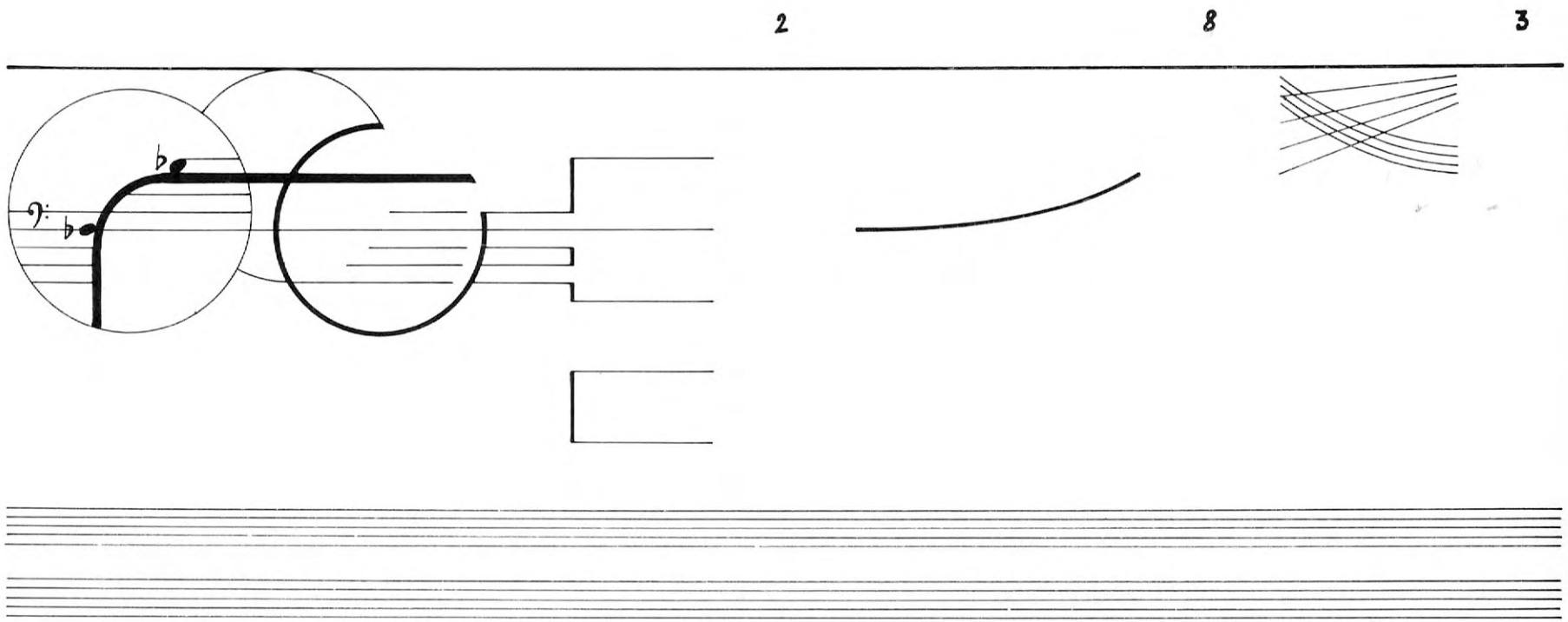
2
8
3

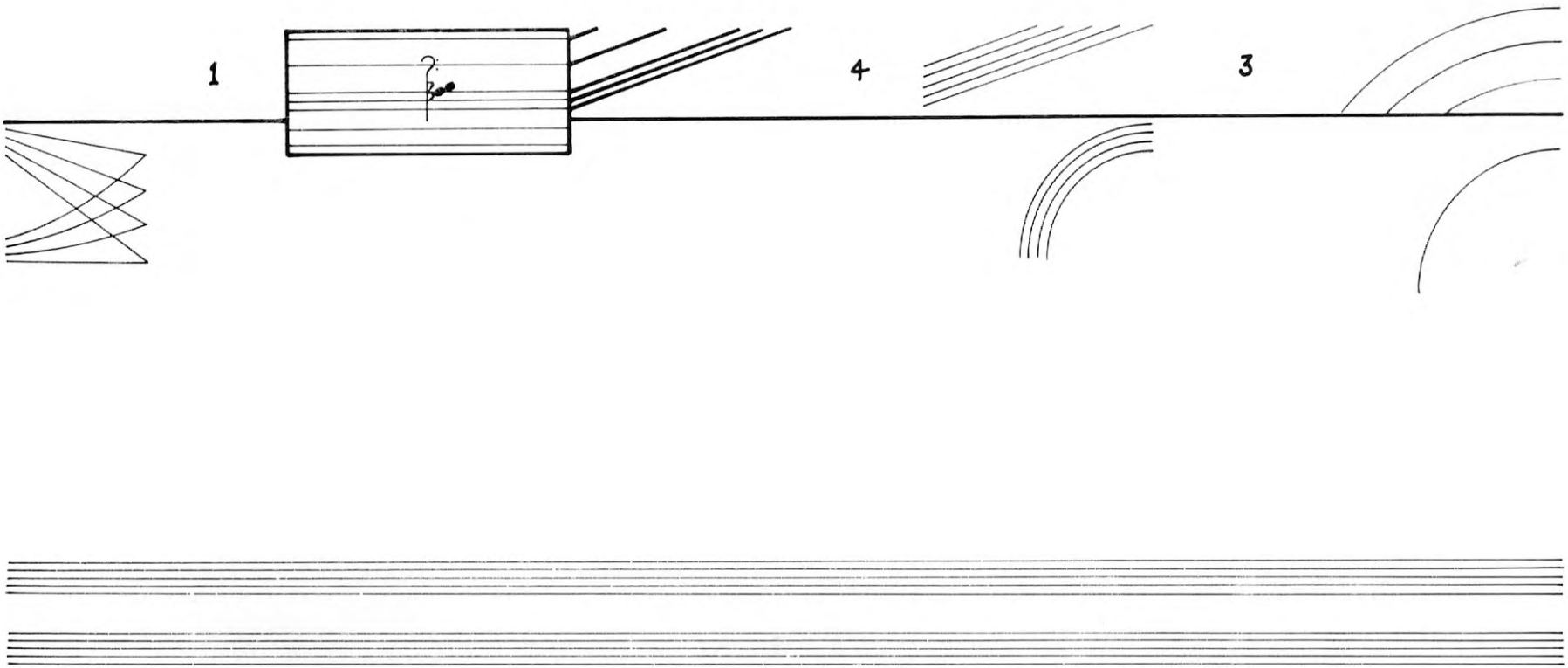
1
4
3

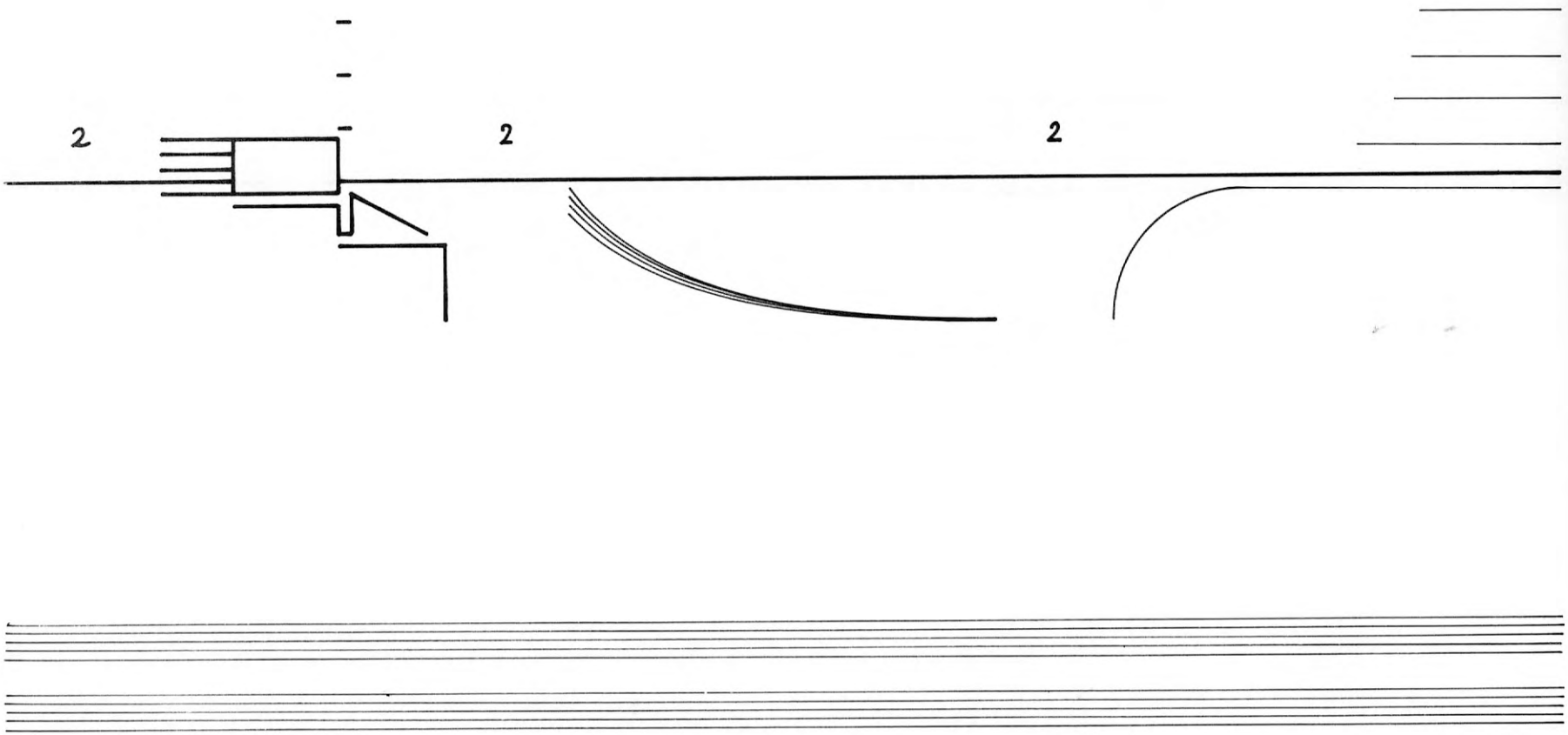
2
2
2

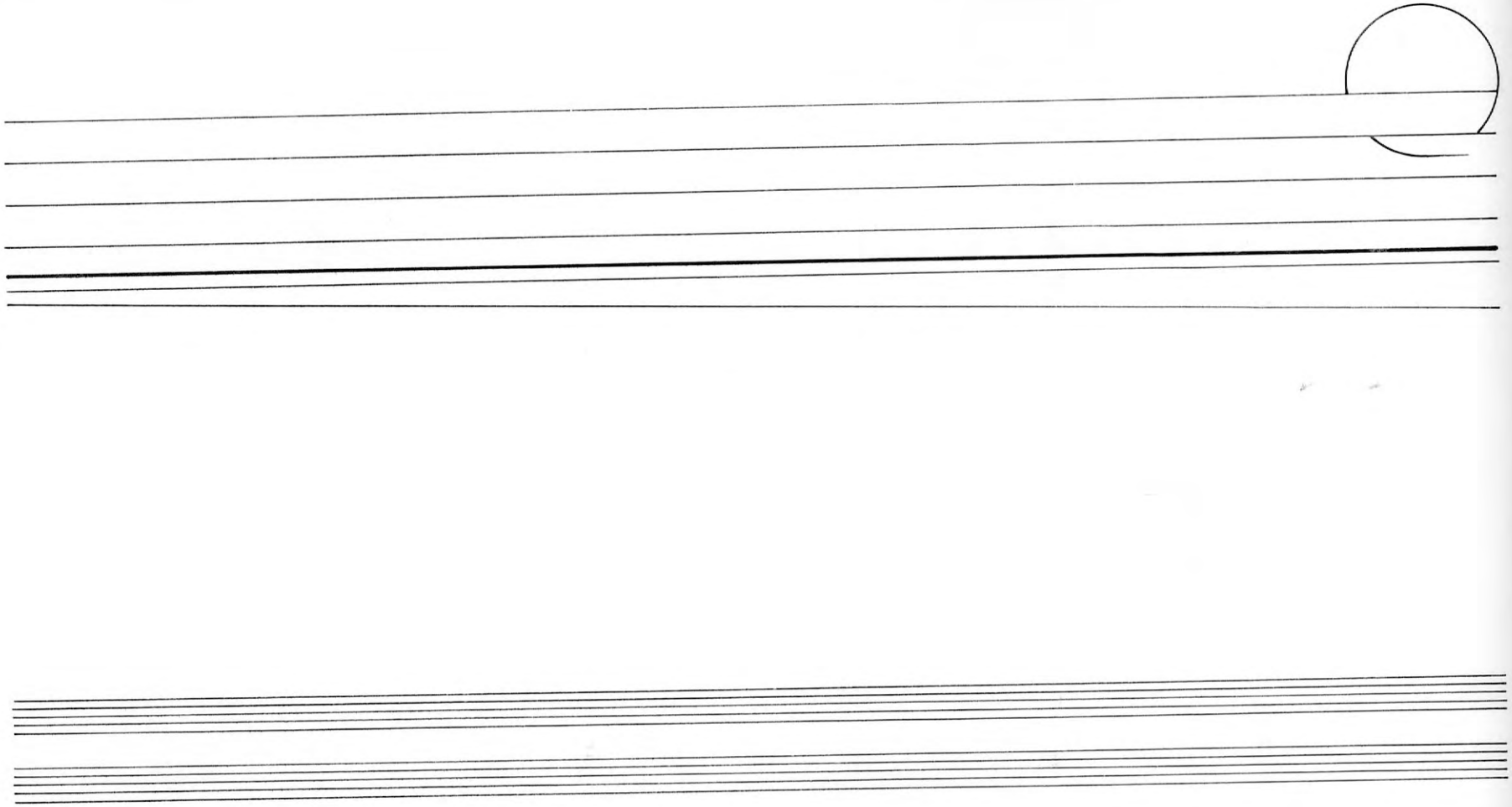

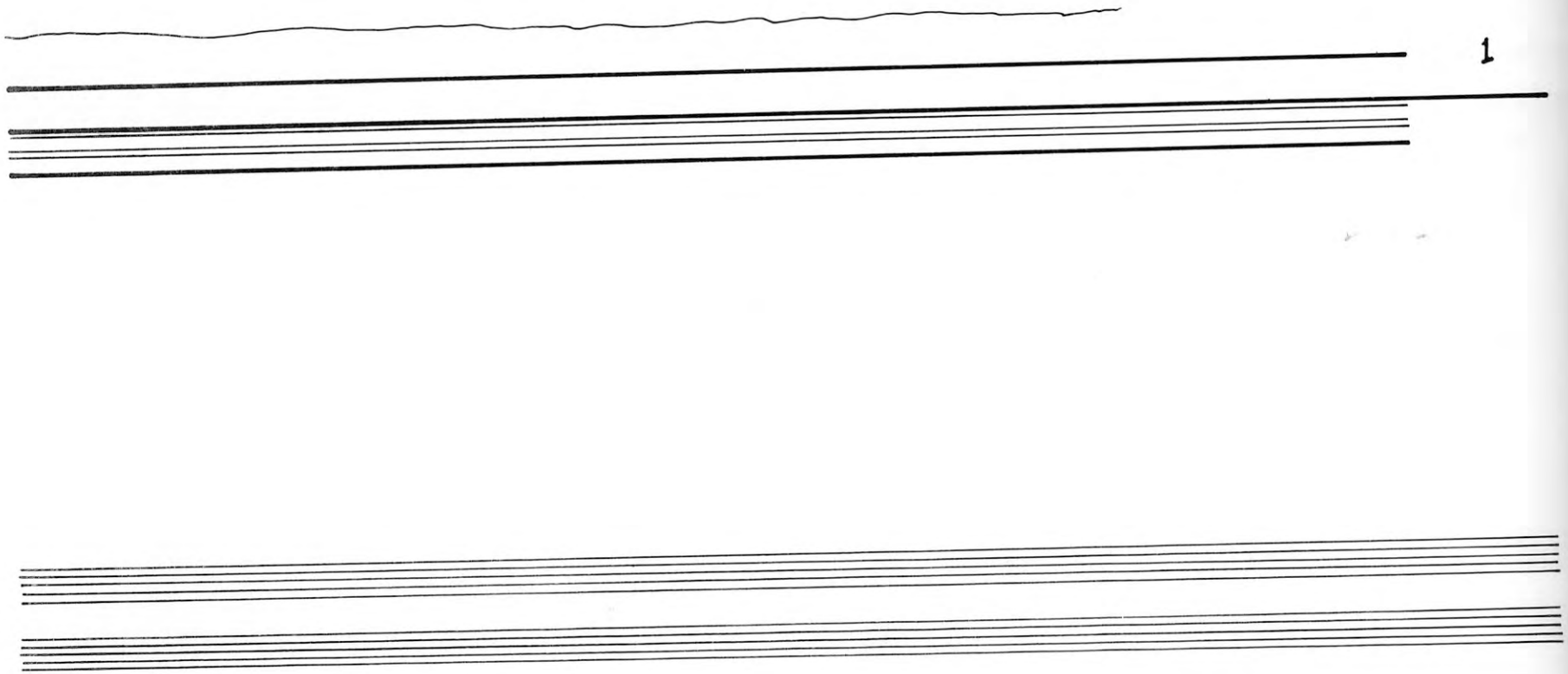
1

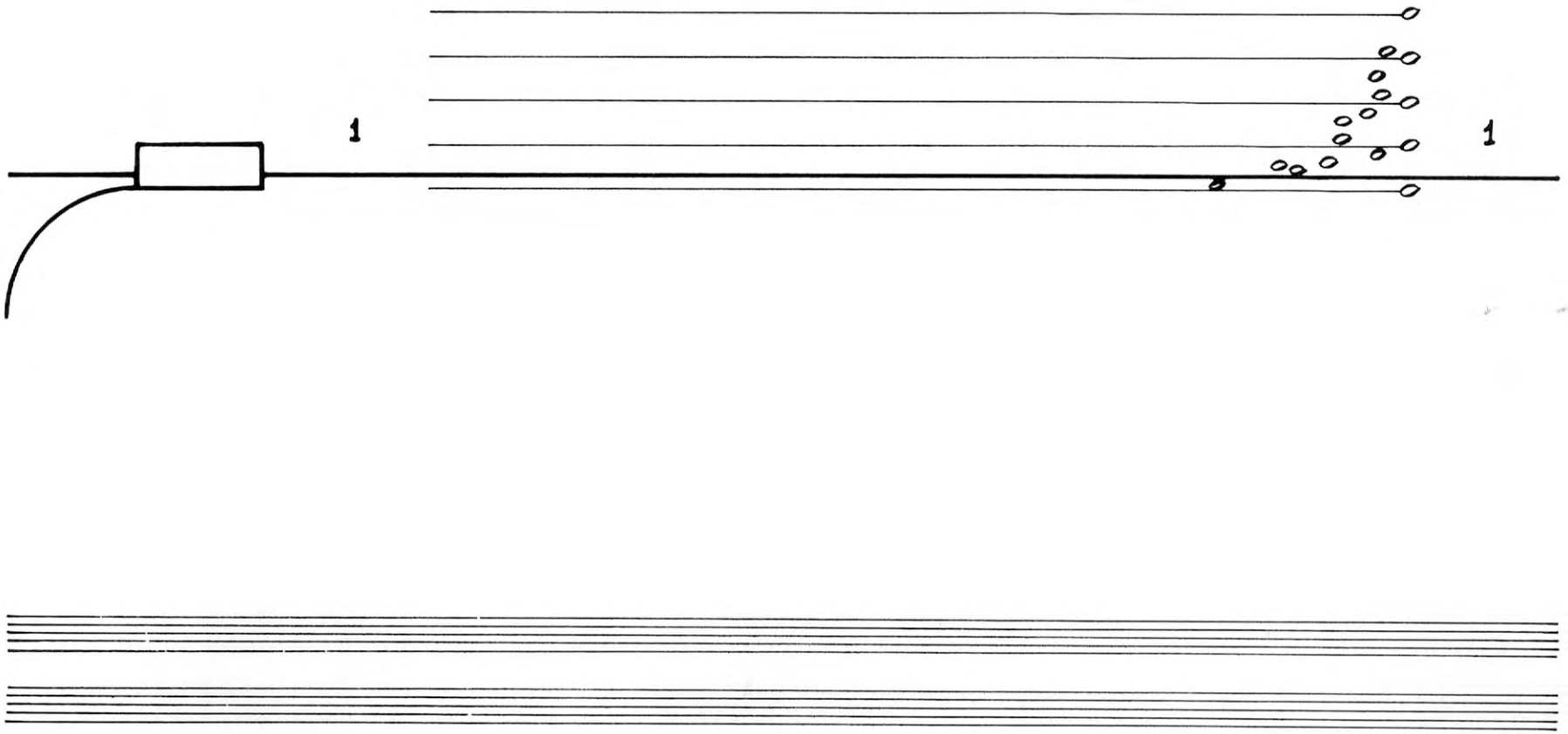
1
1

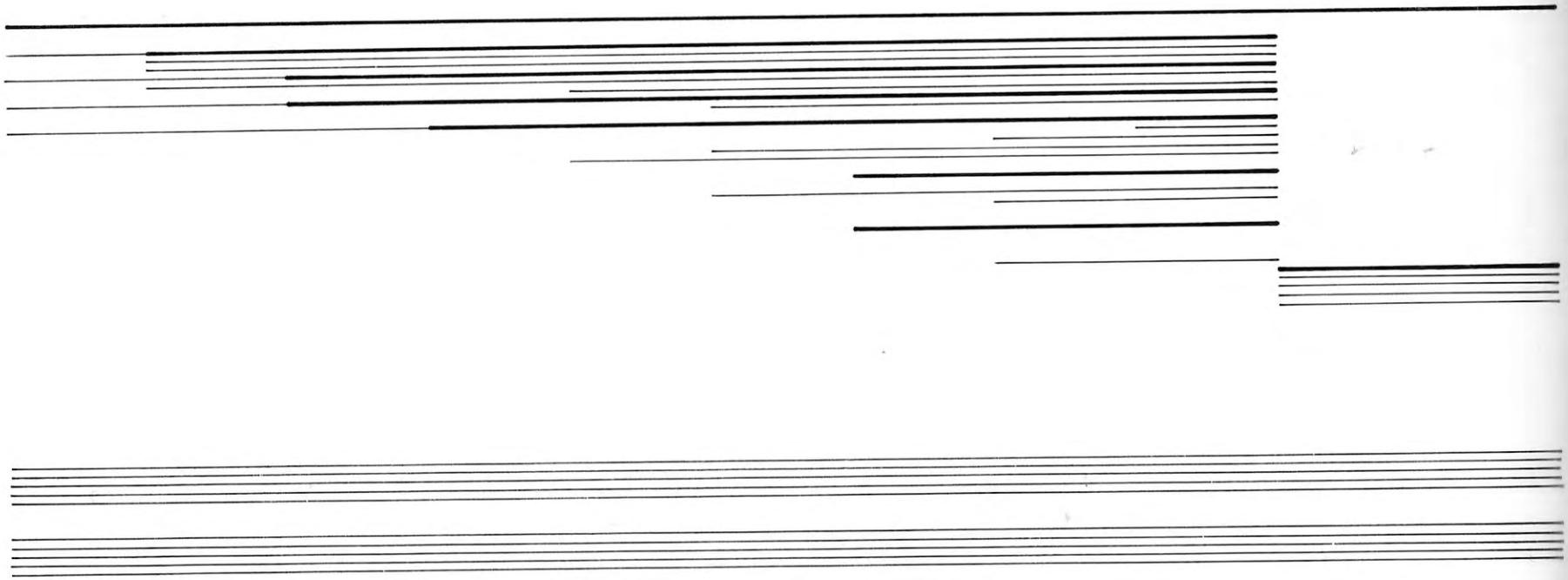

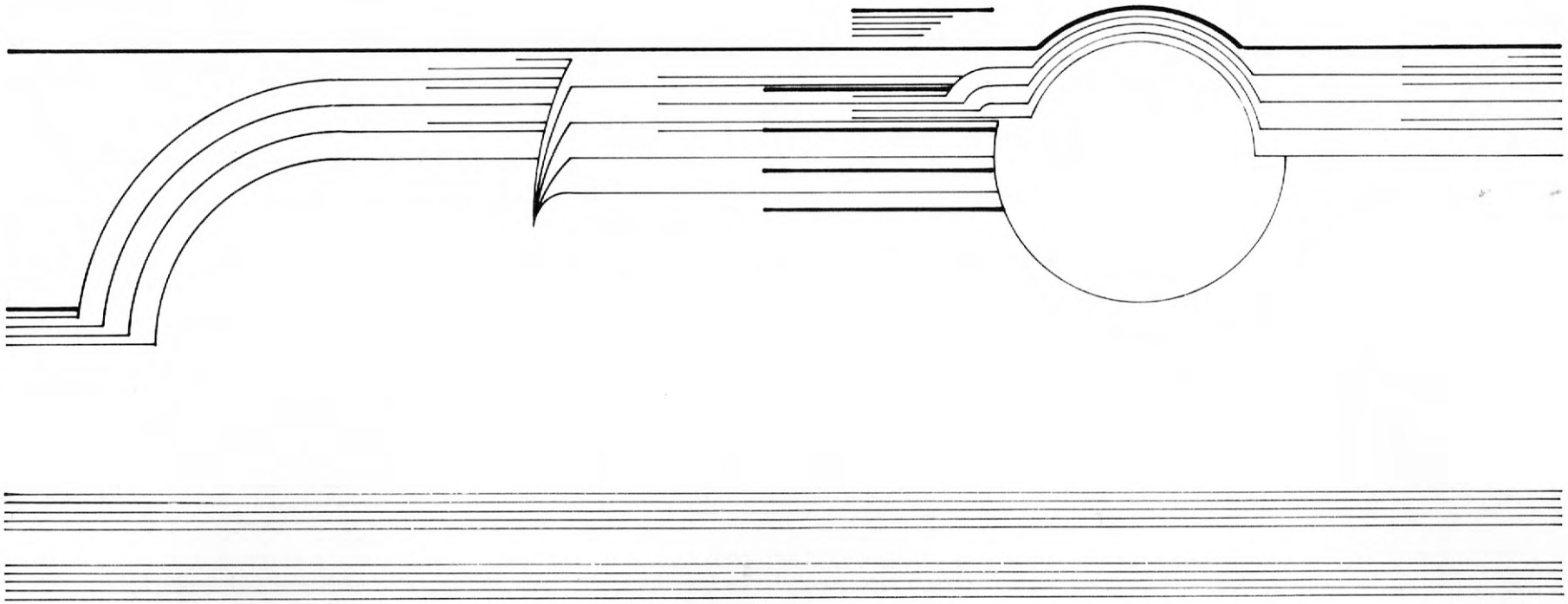

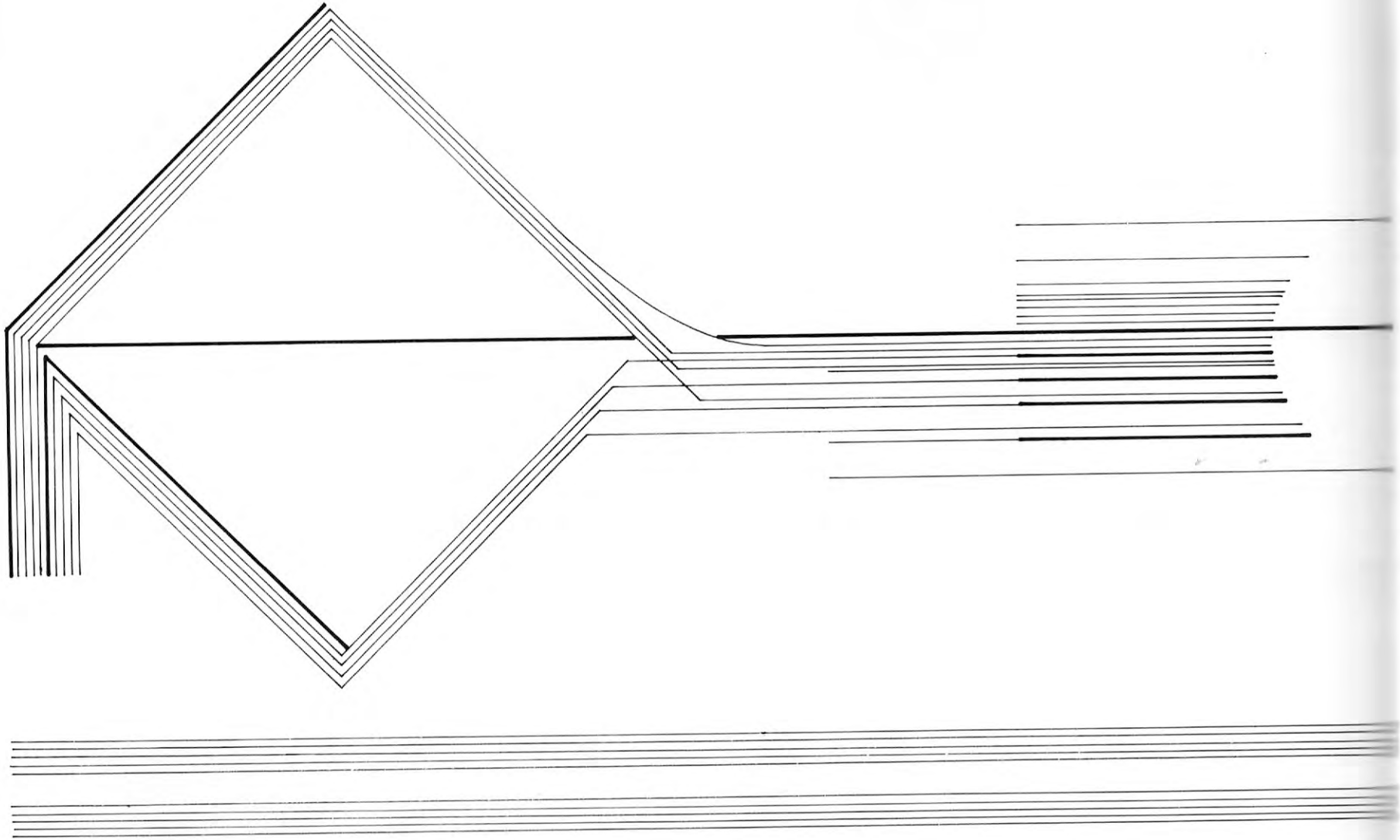

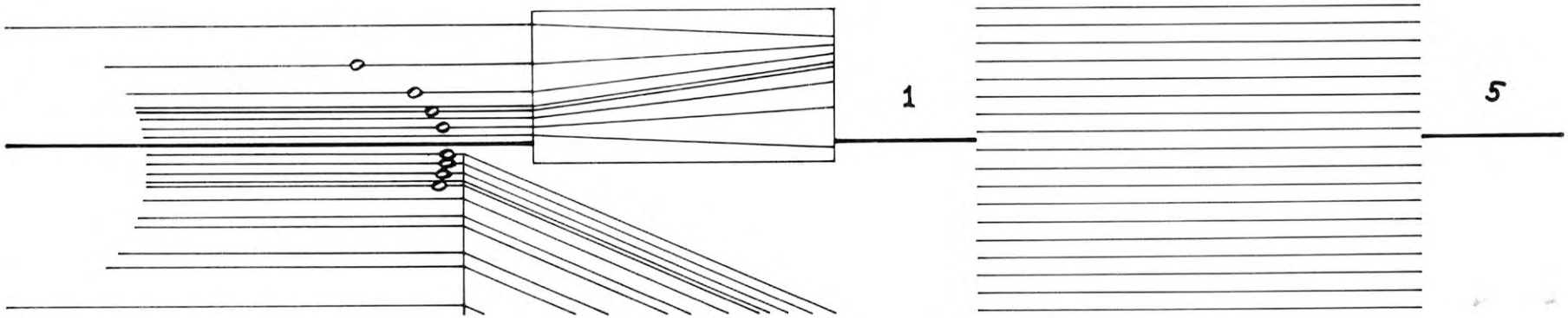
1
5

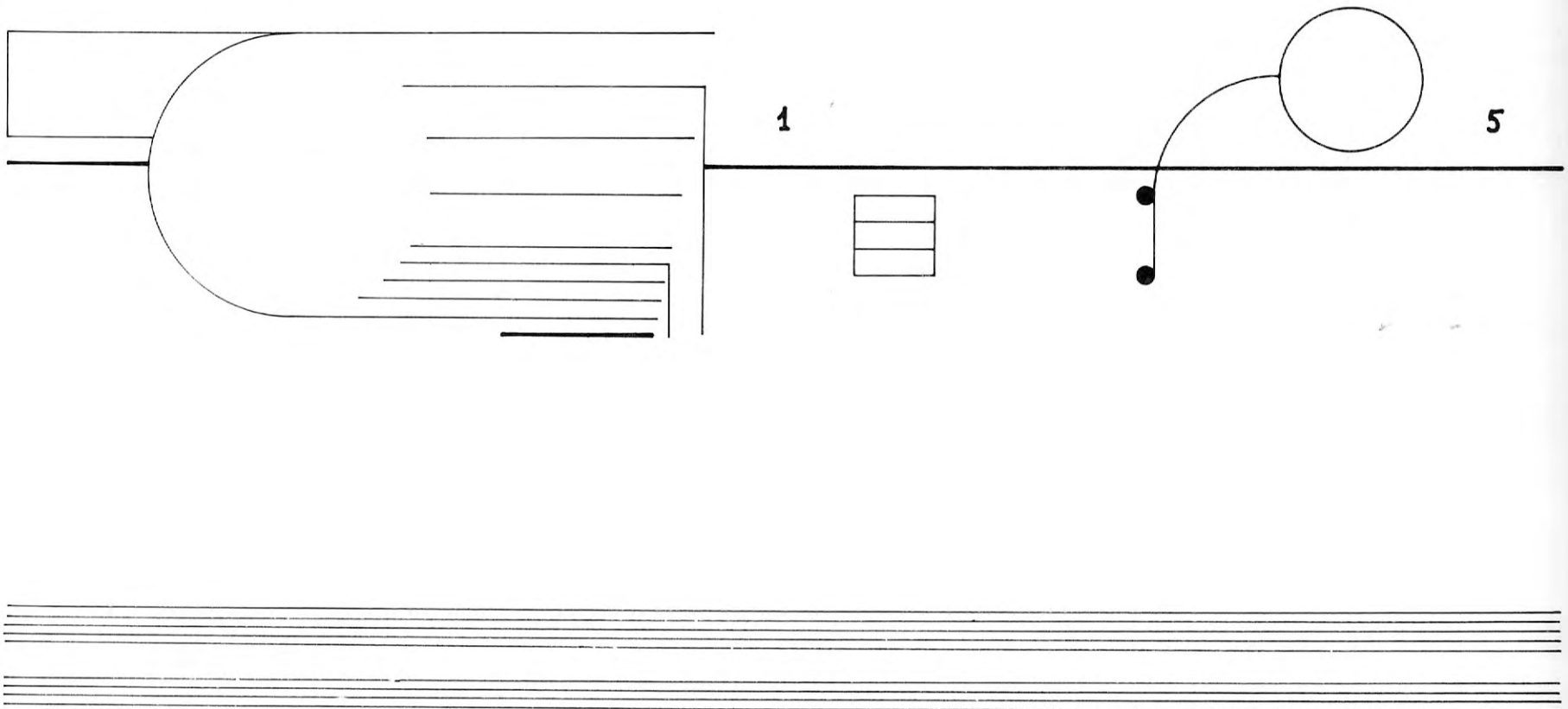
1
5

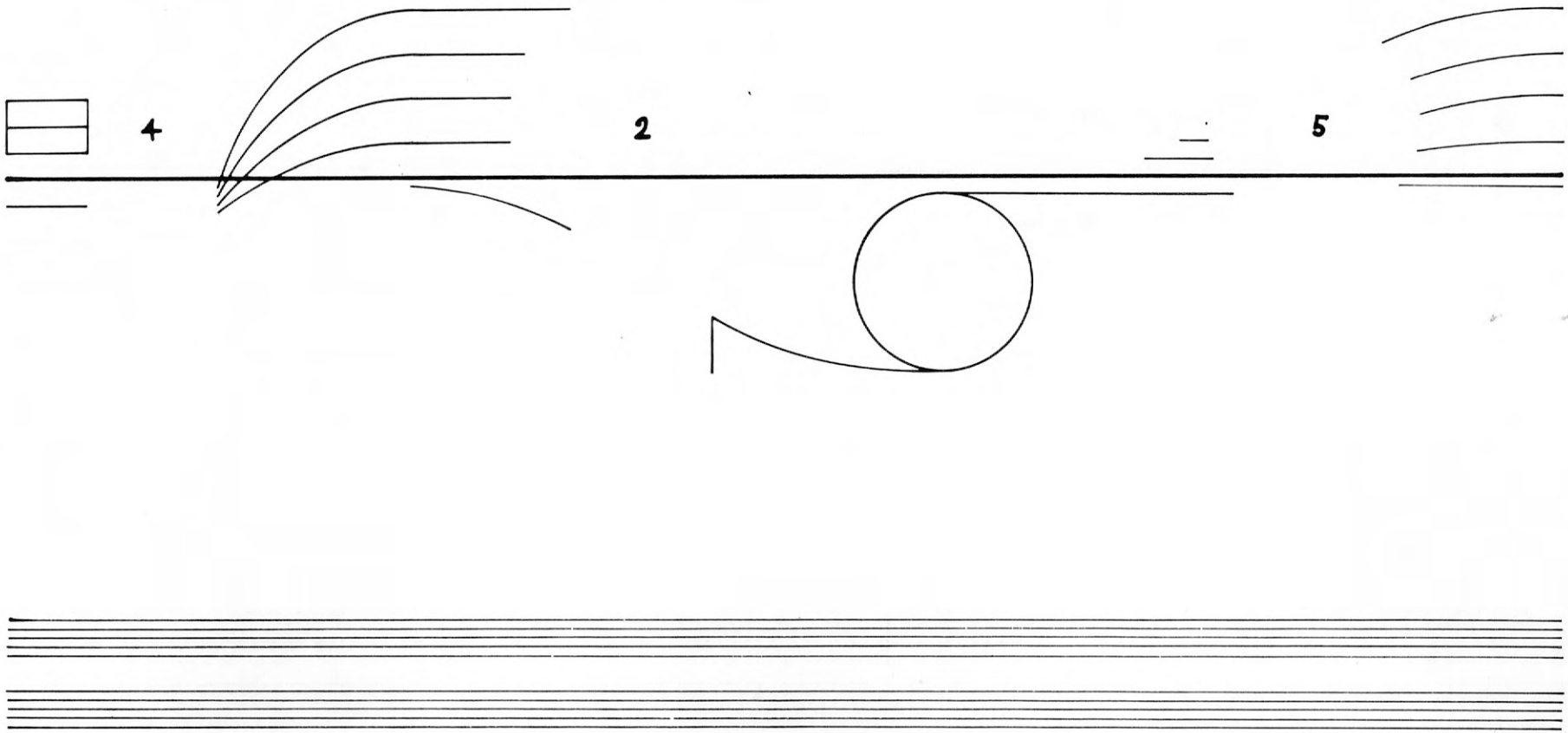
4
2
5

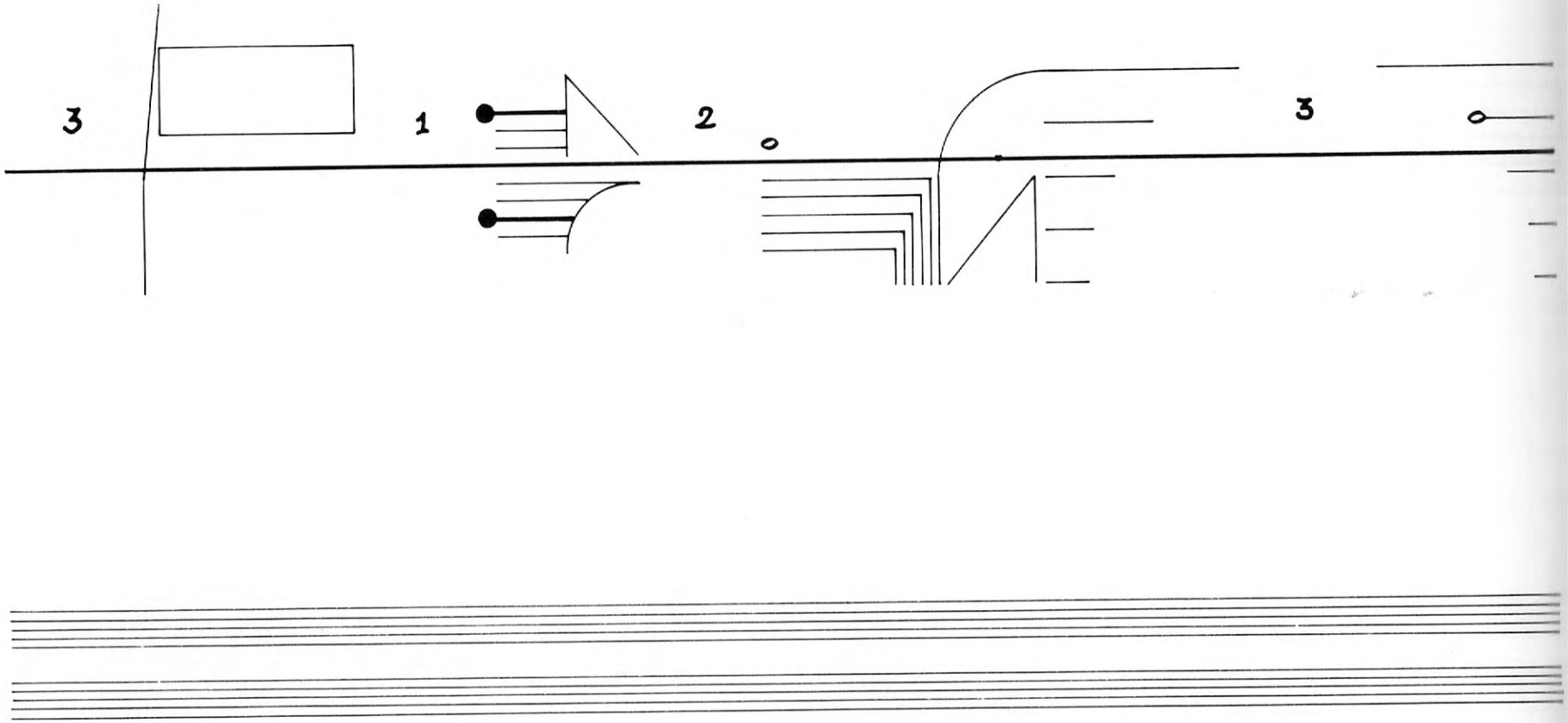
3
1
2
3

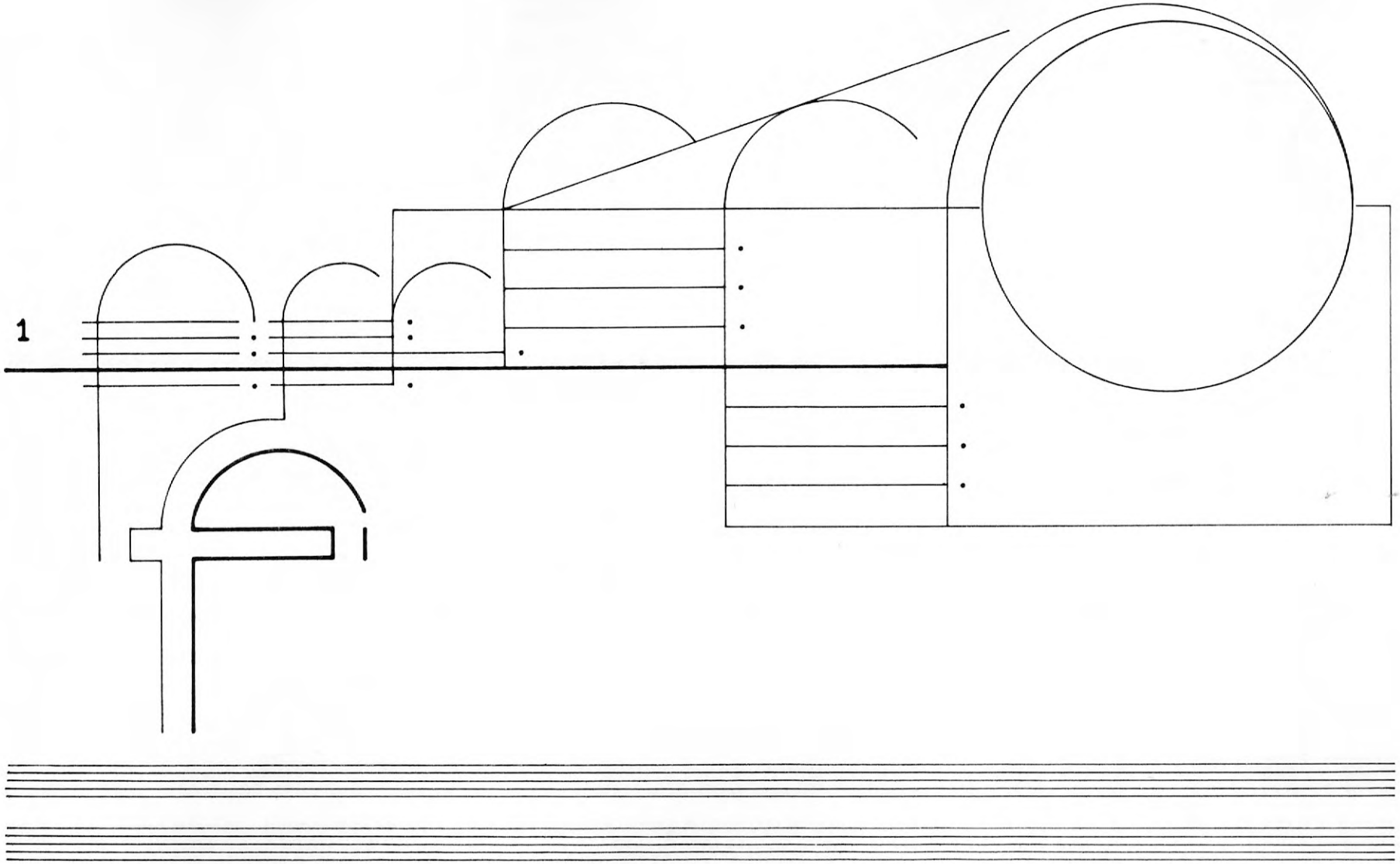
1

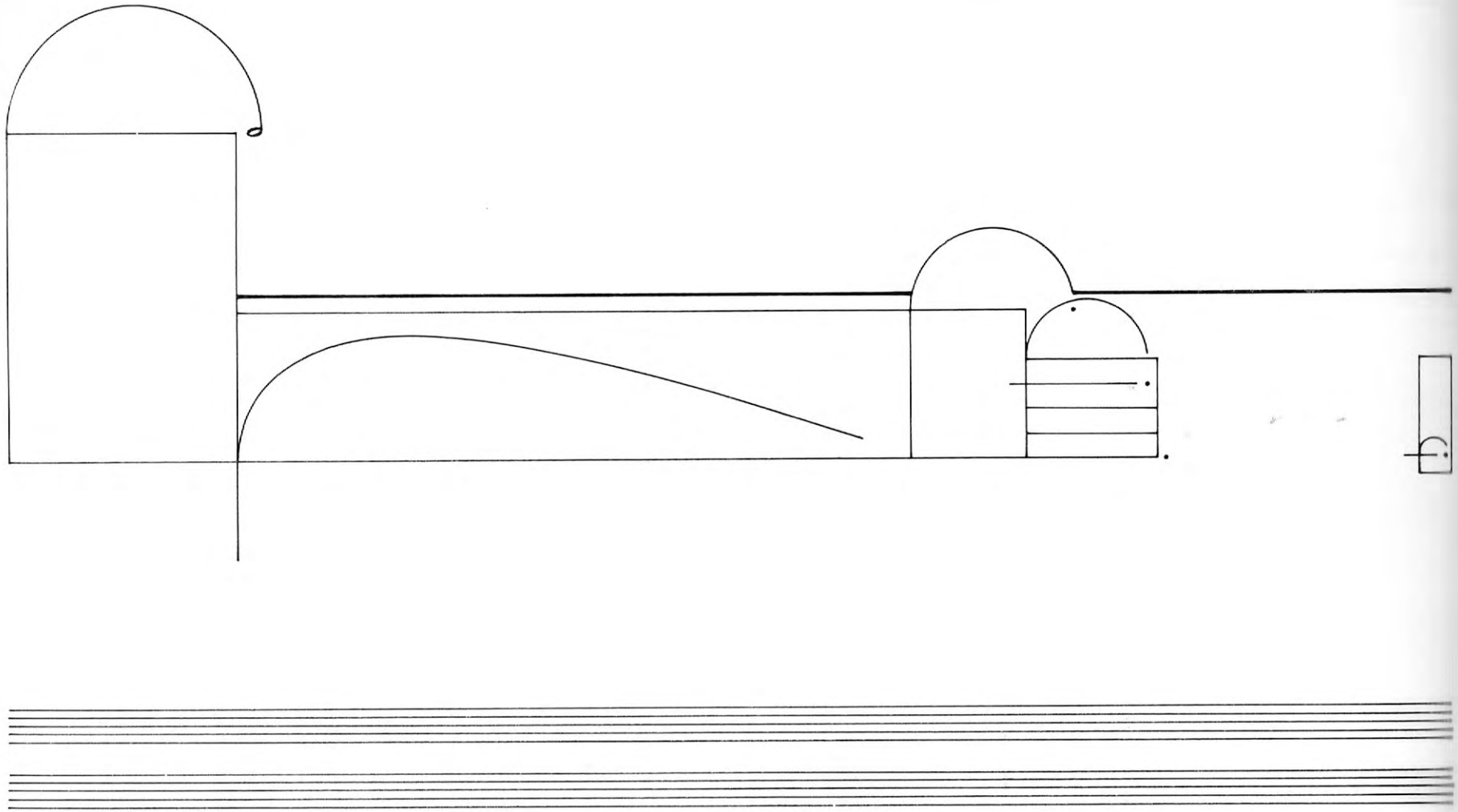

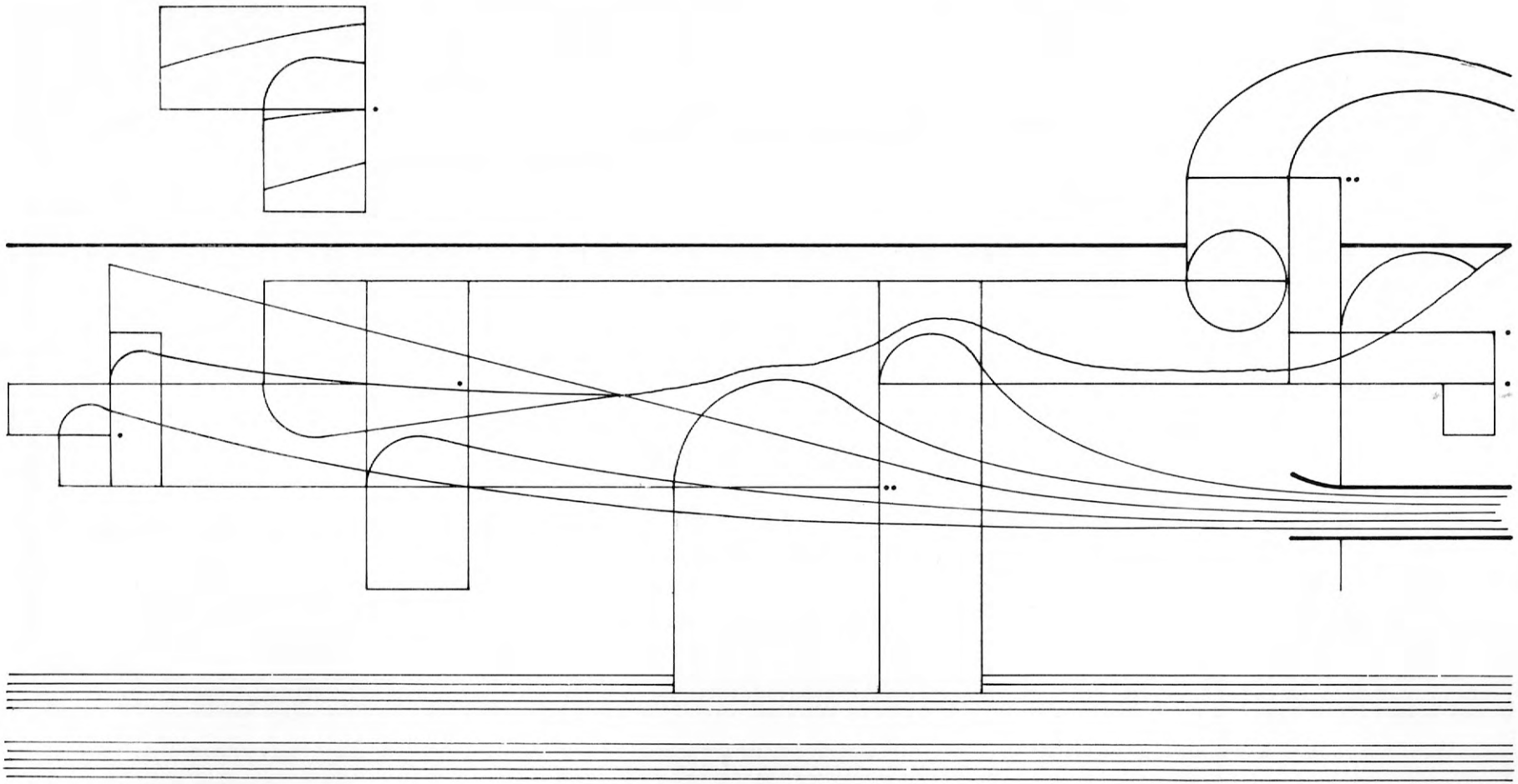

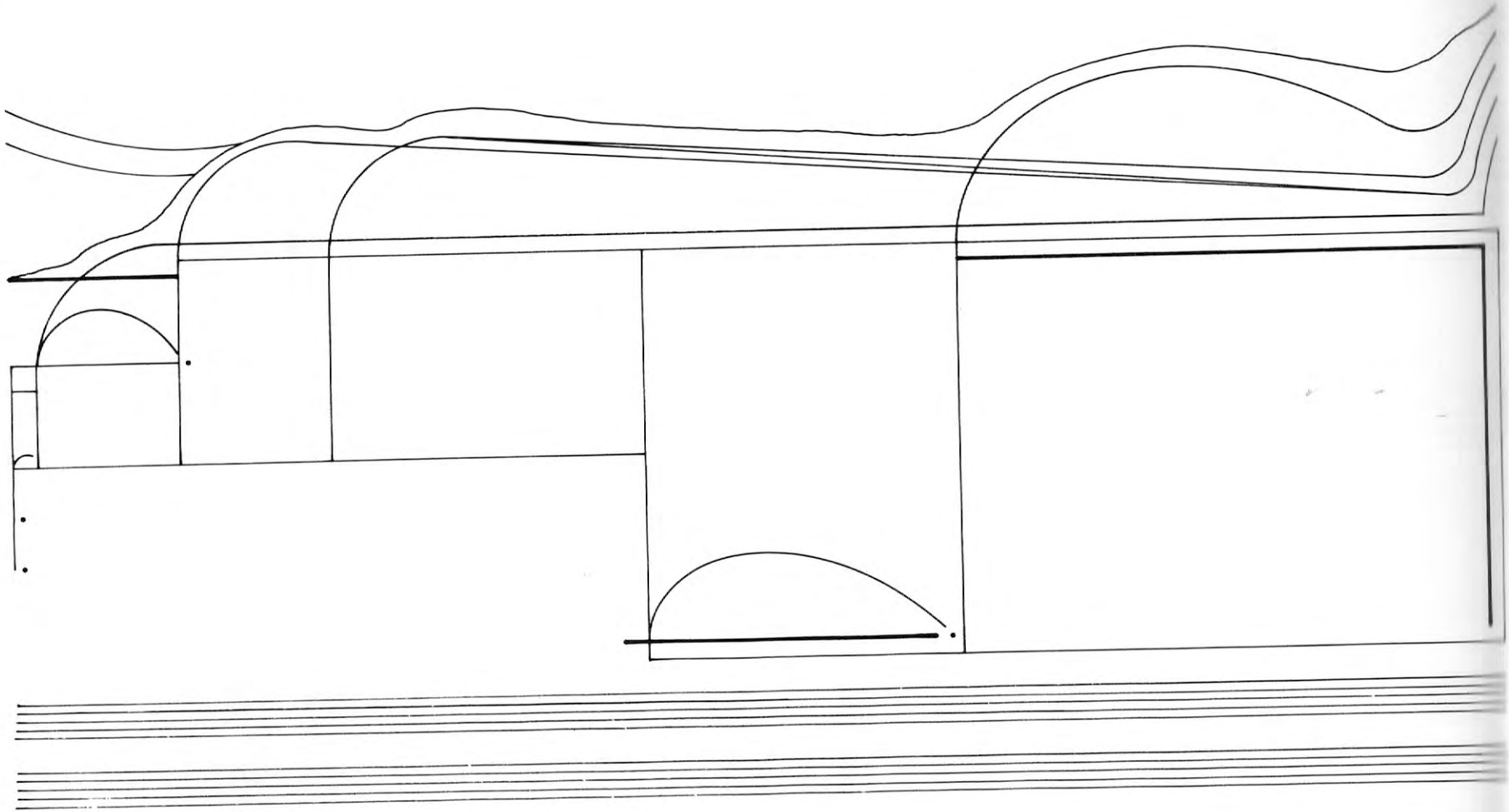

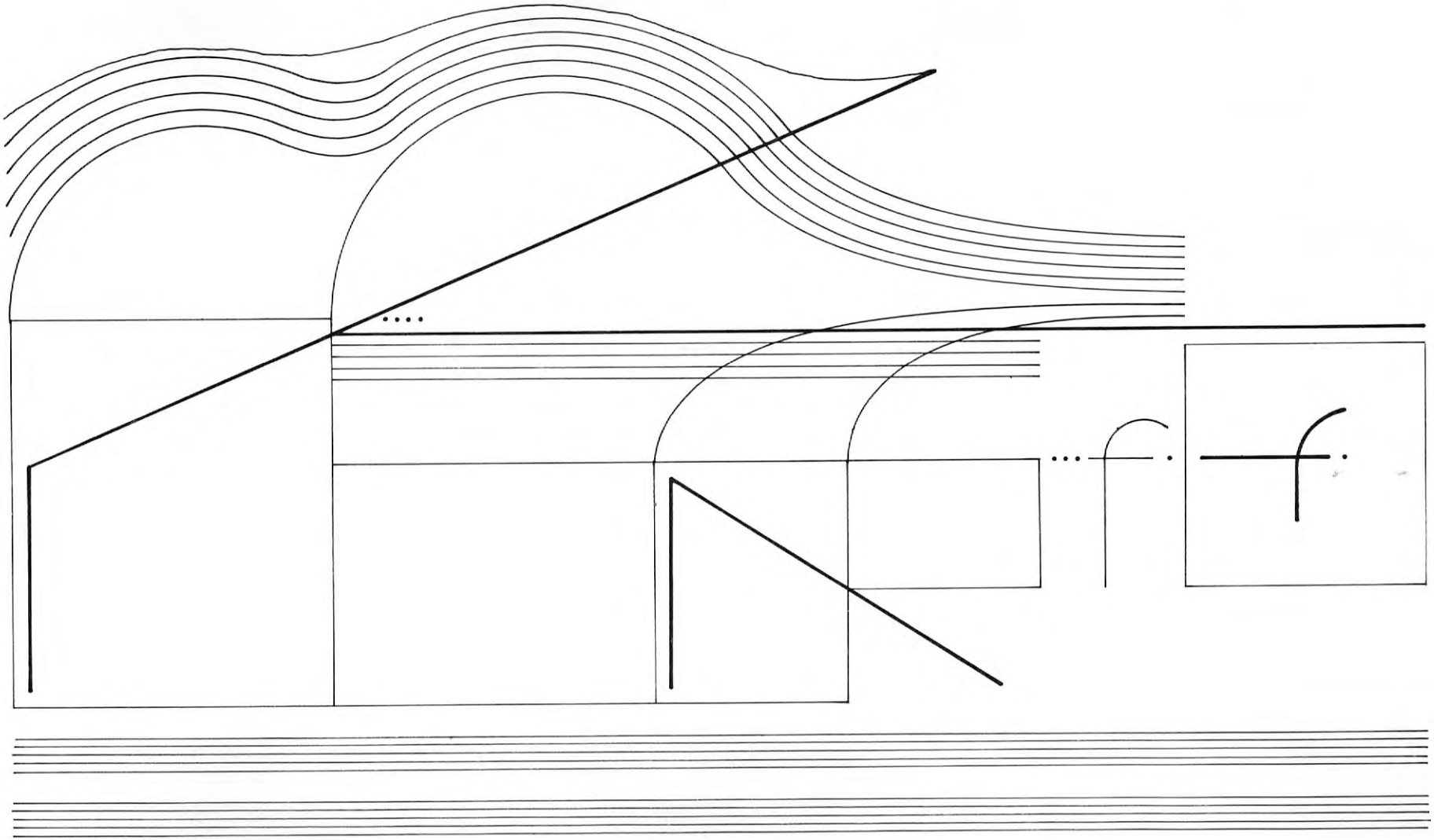

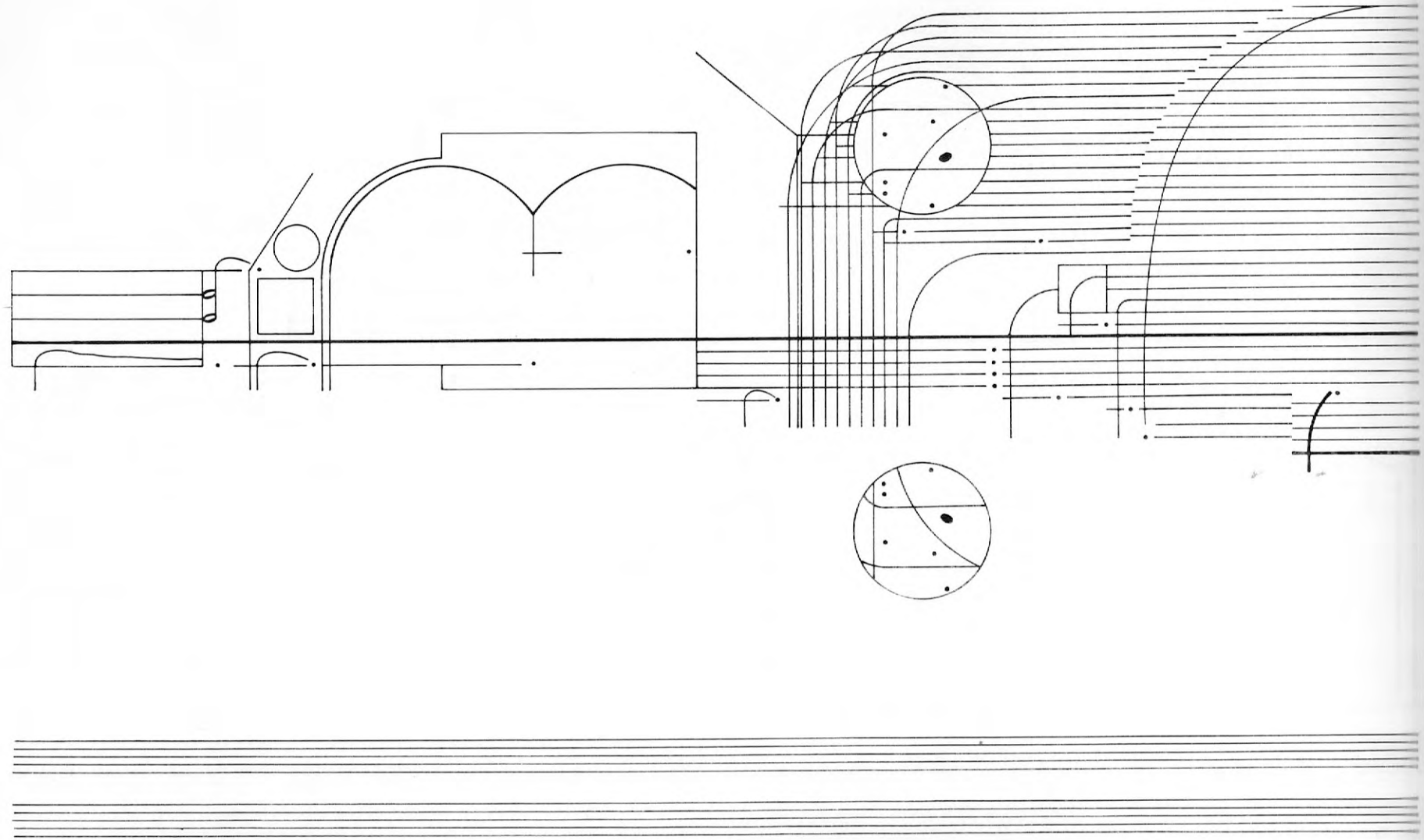

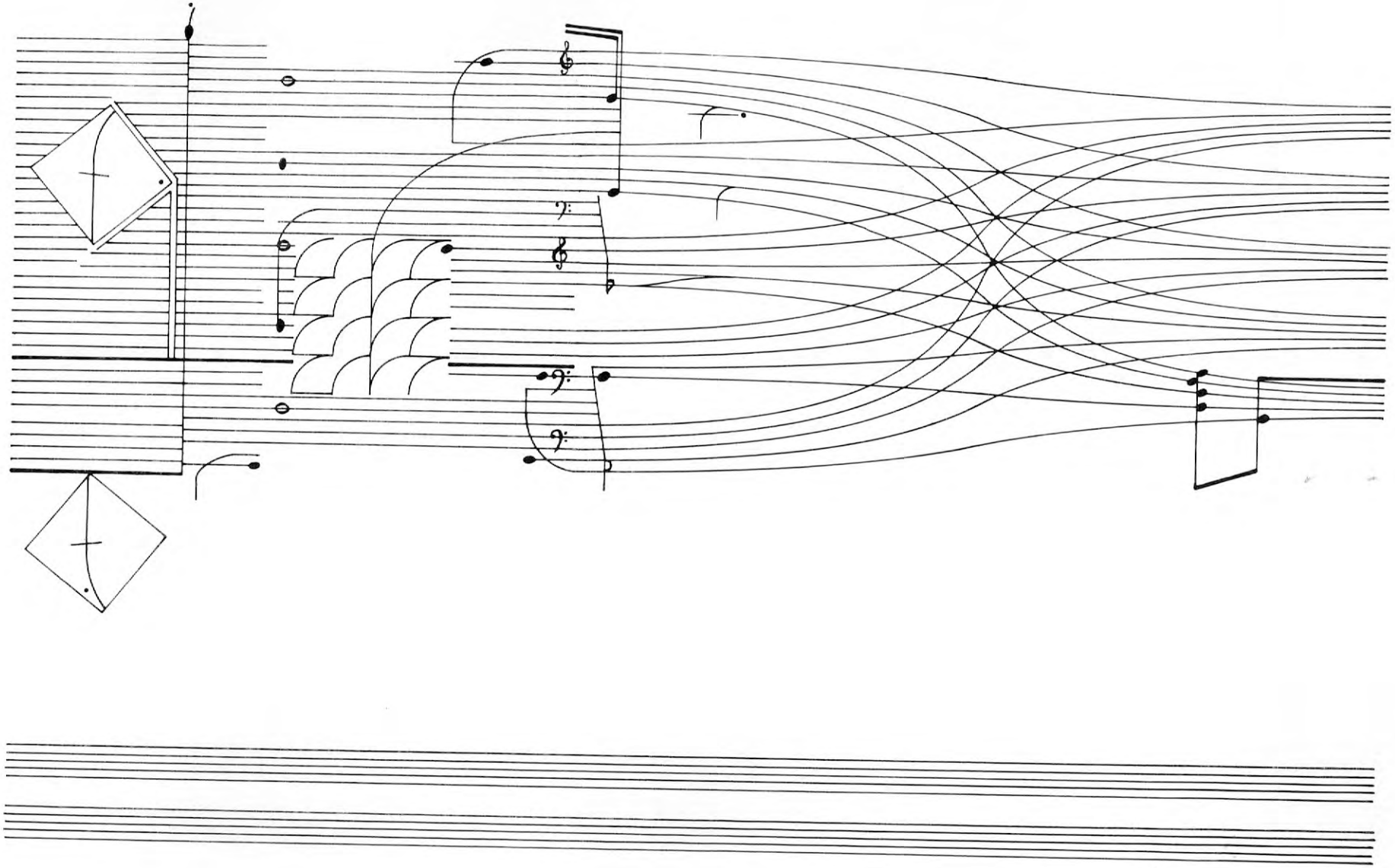

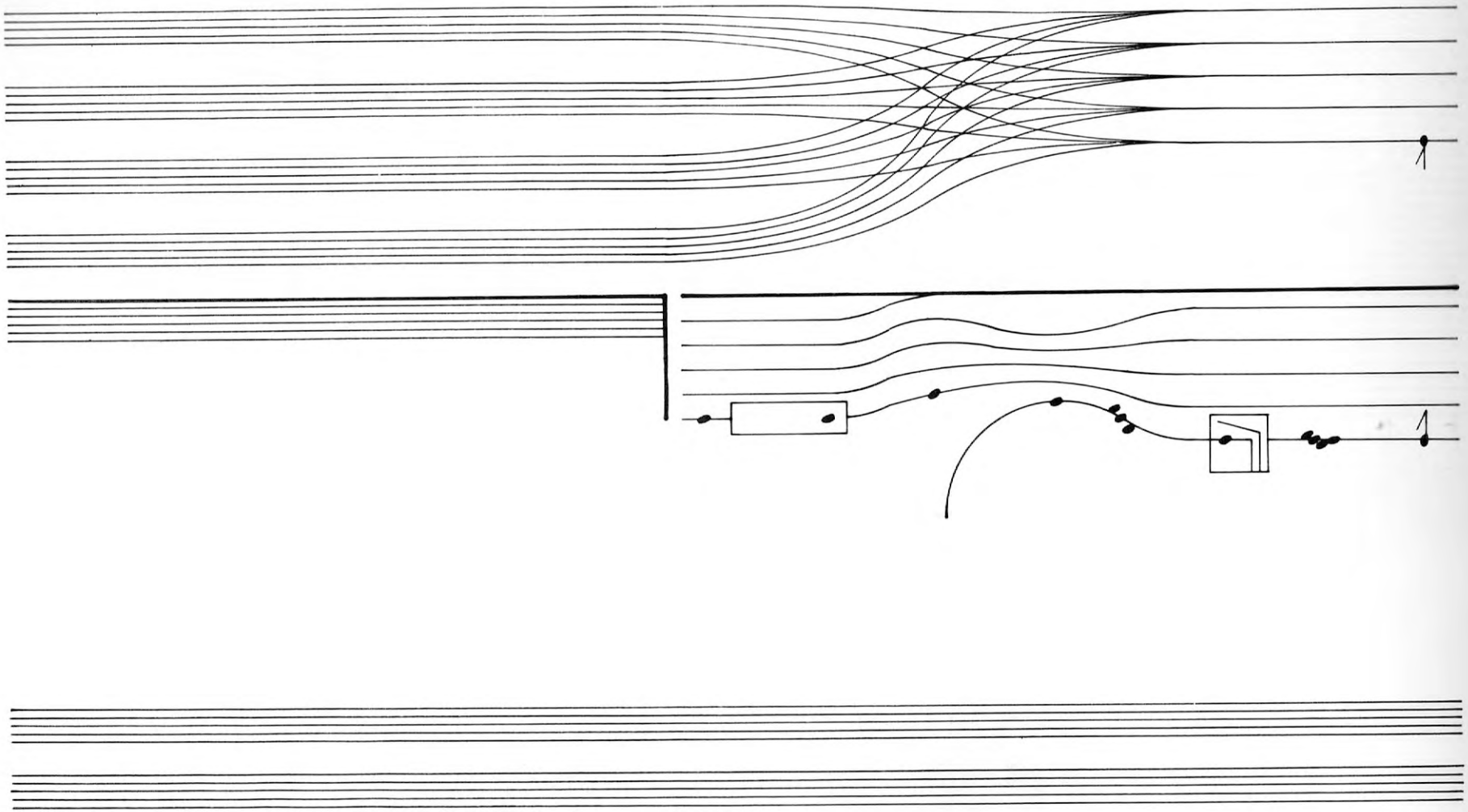

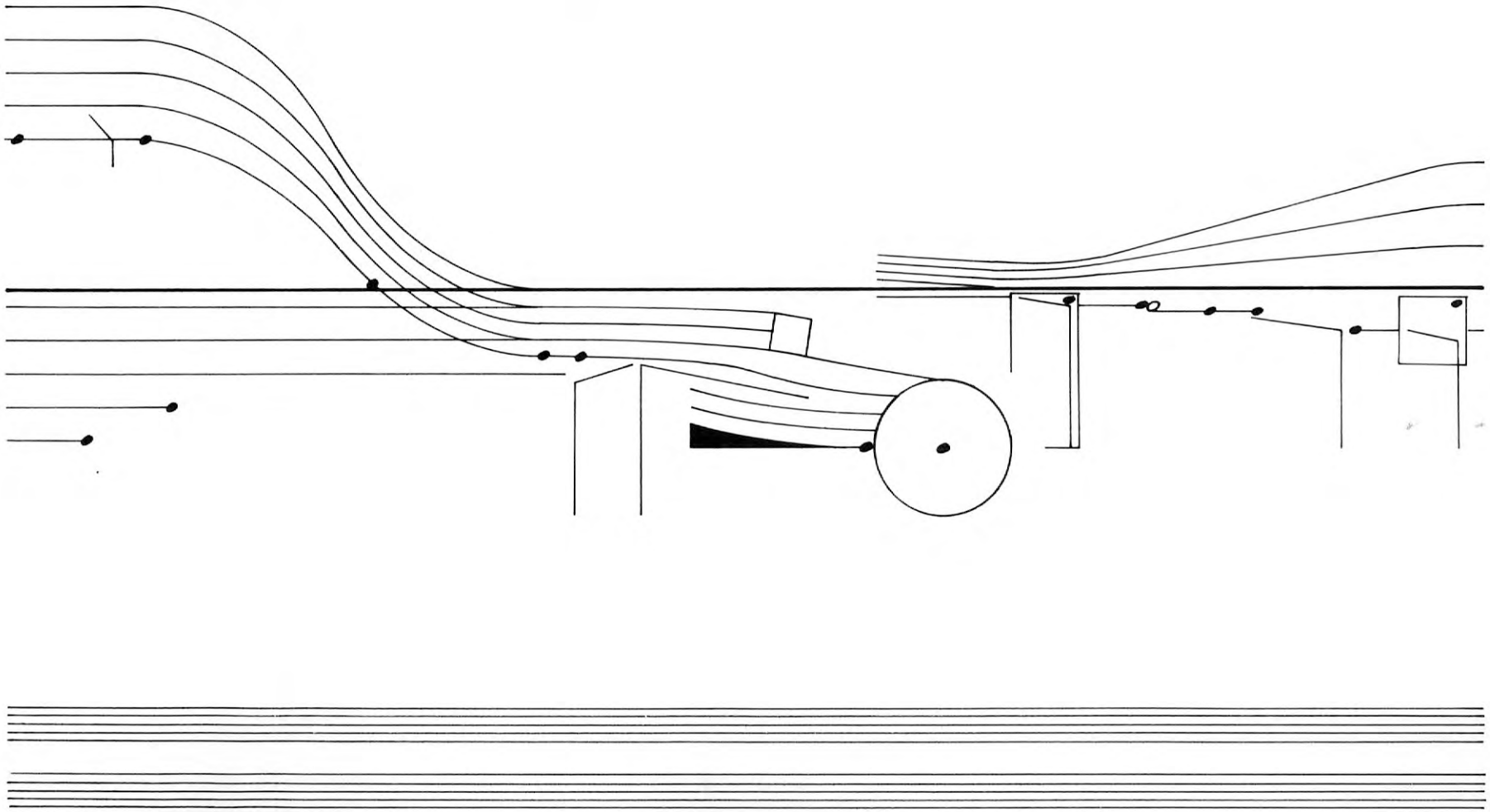

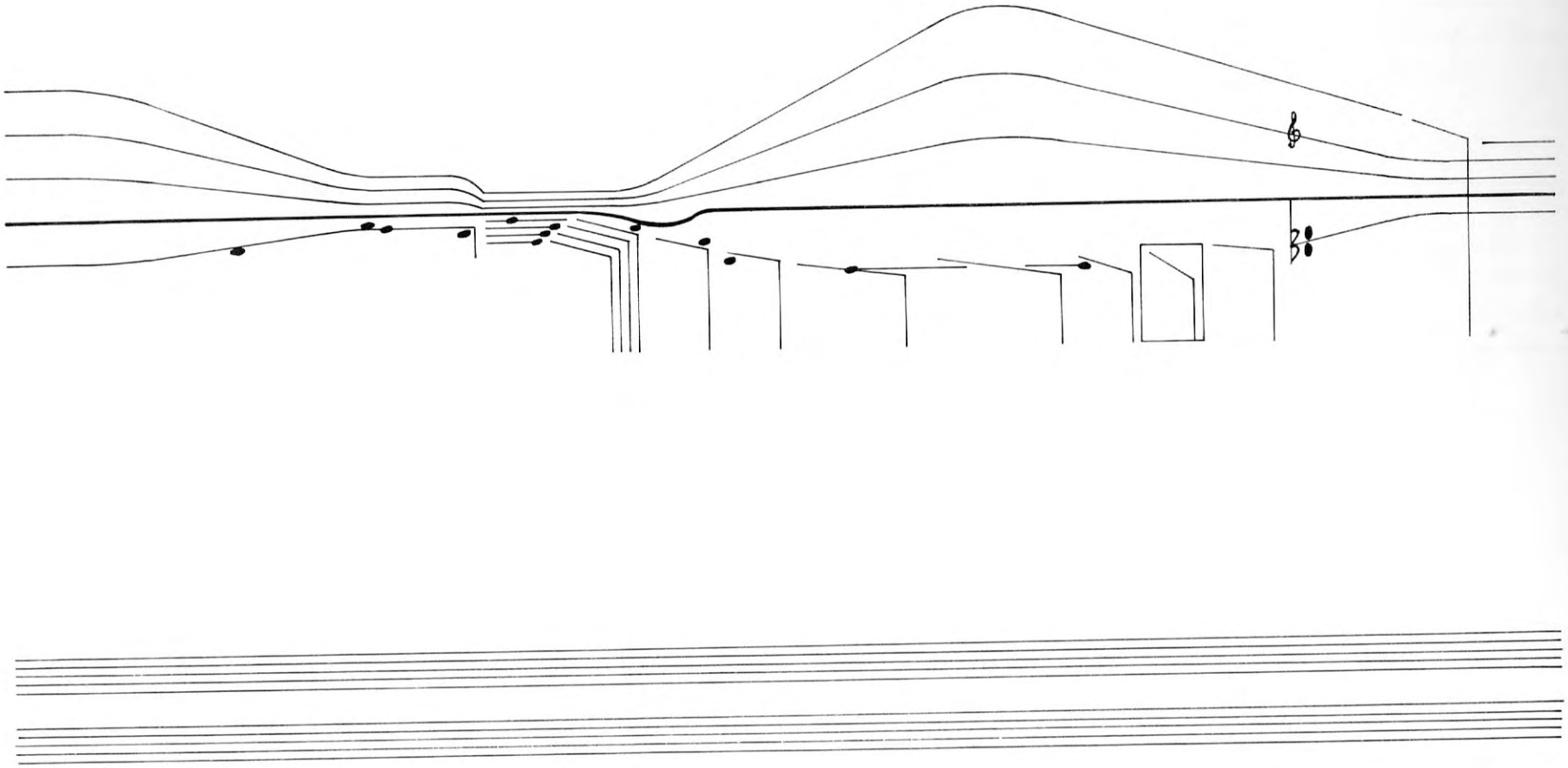

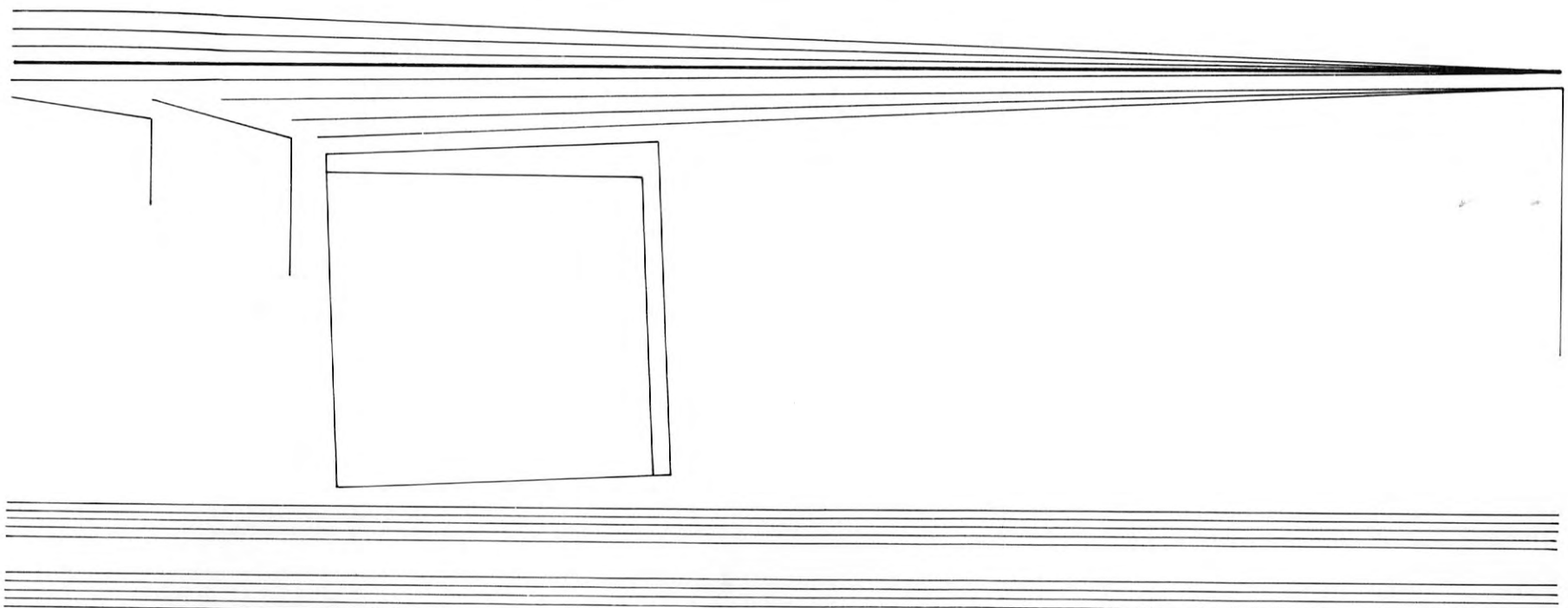

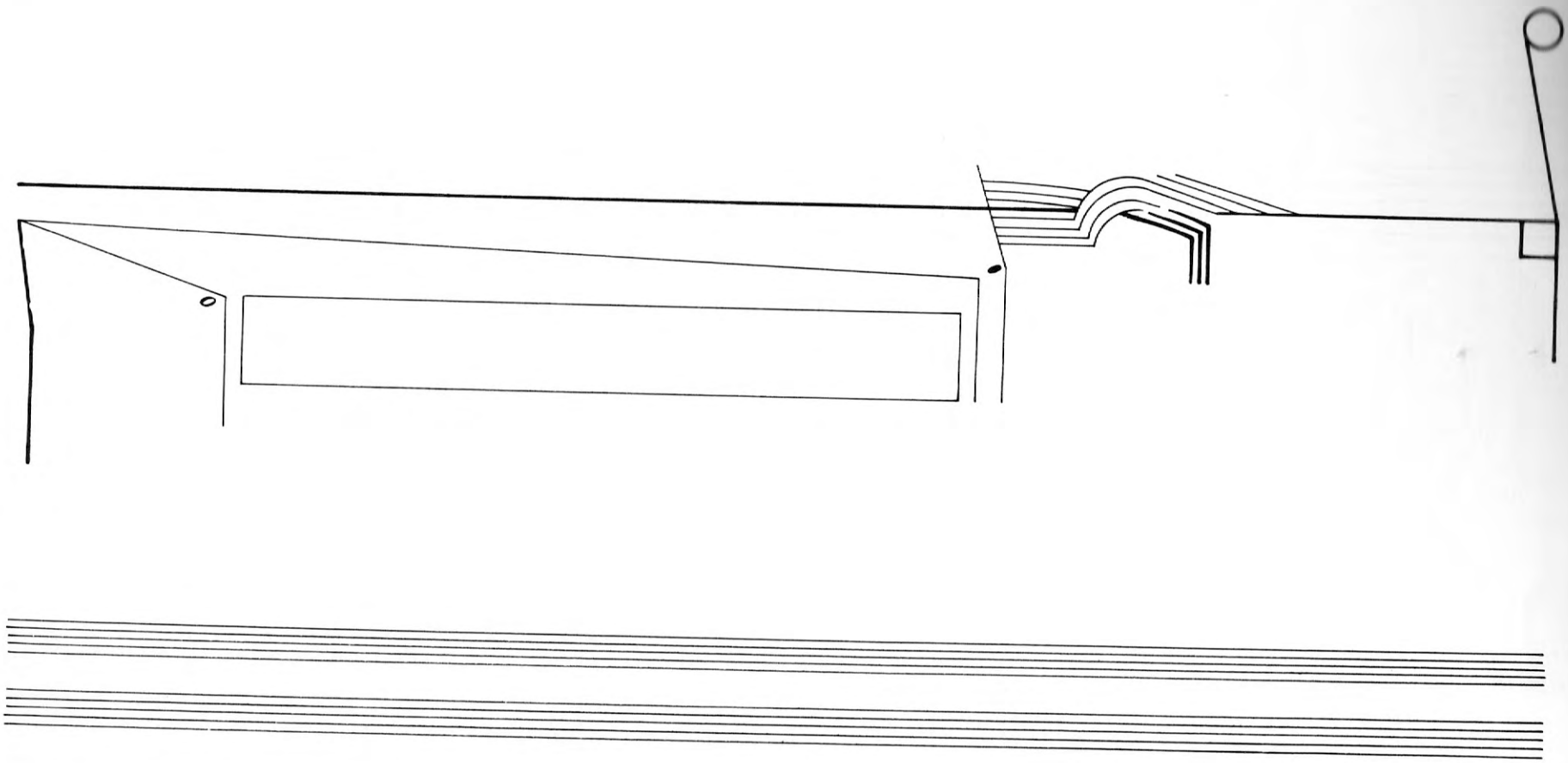

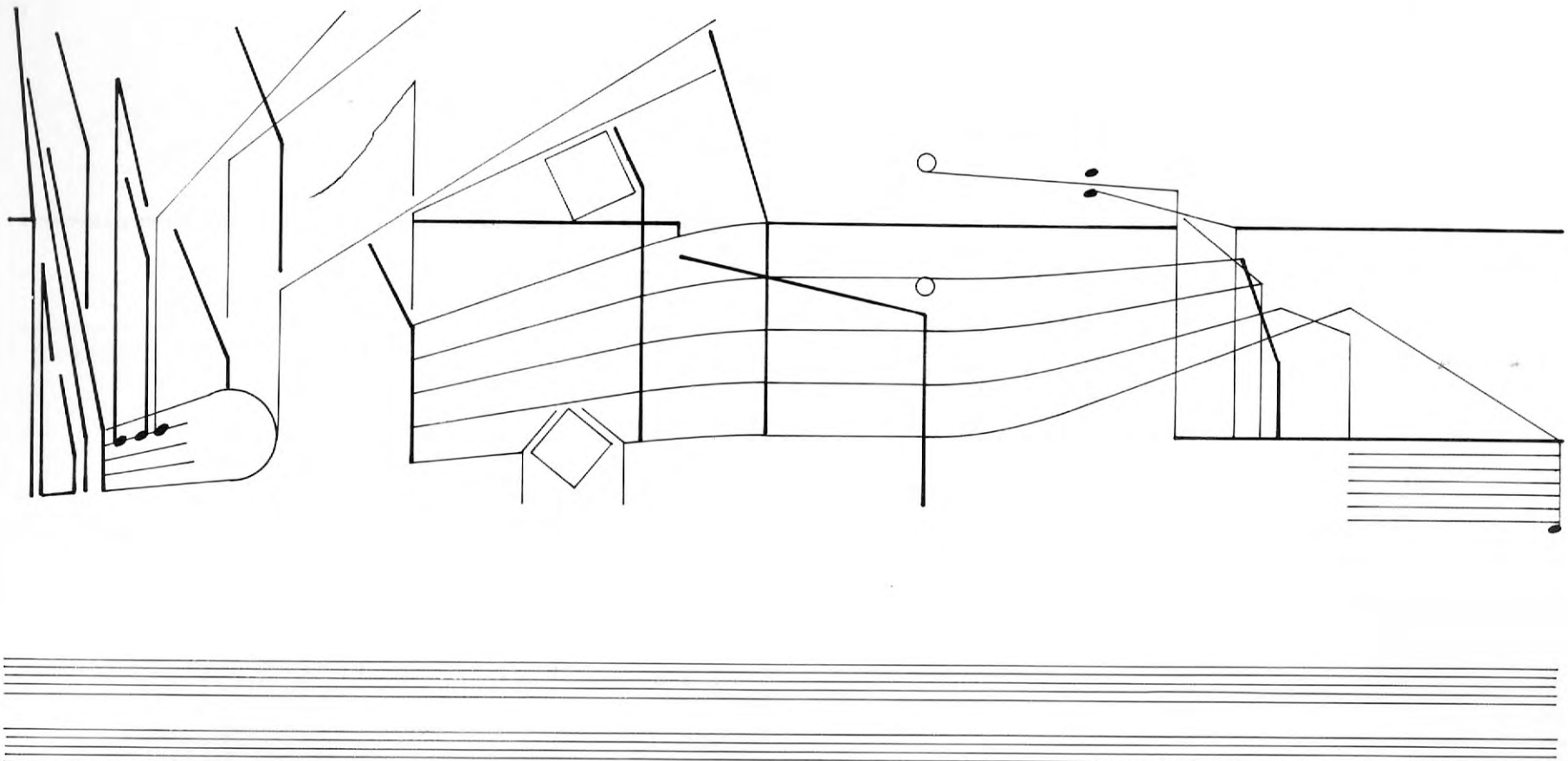

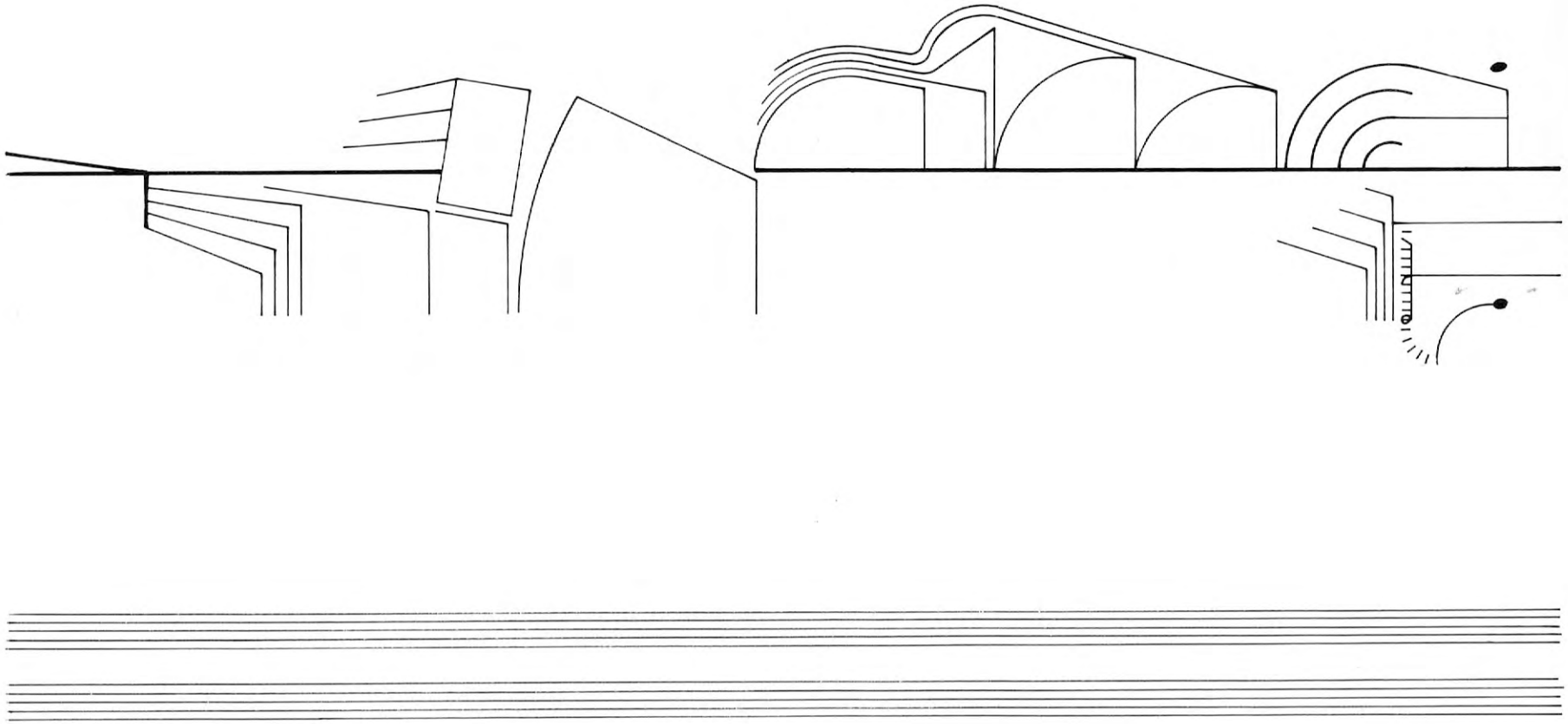

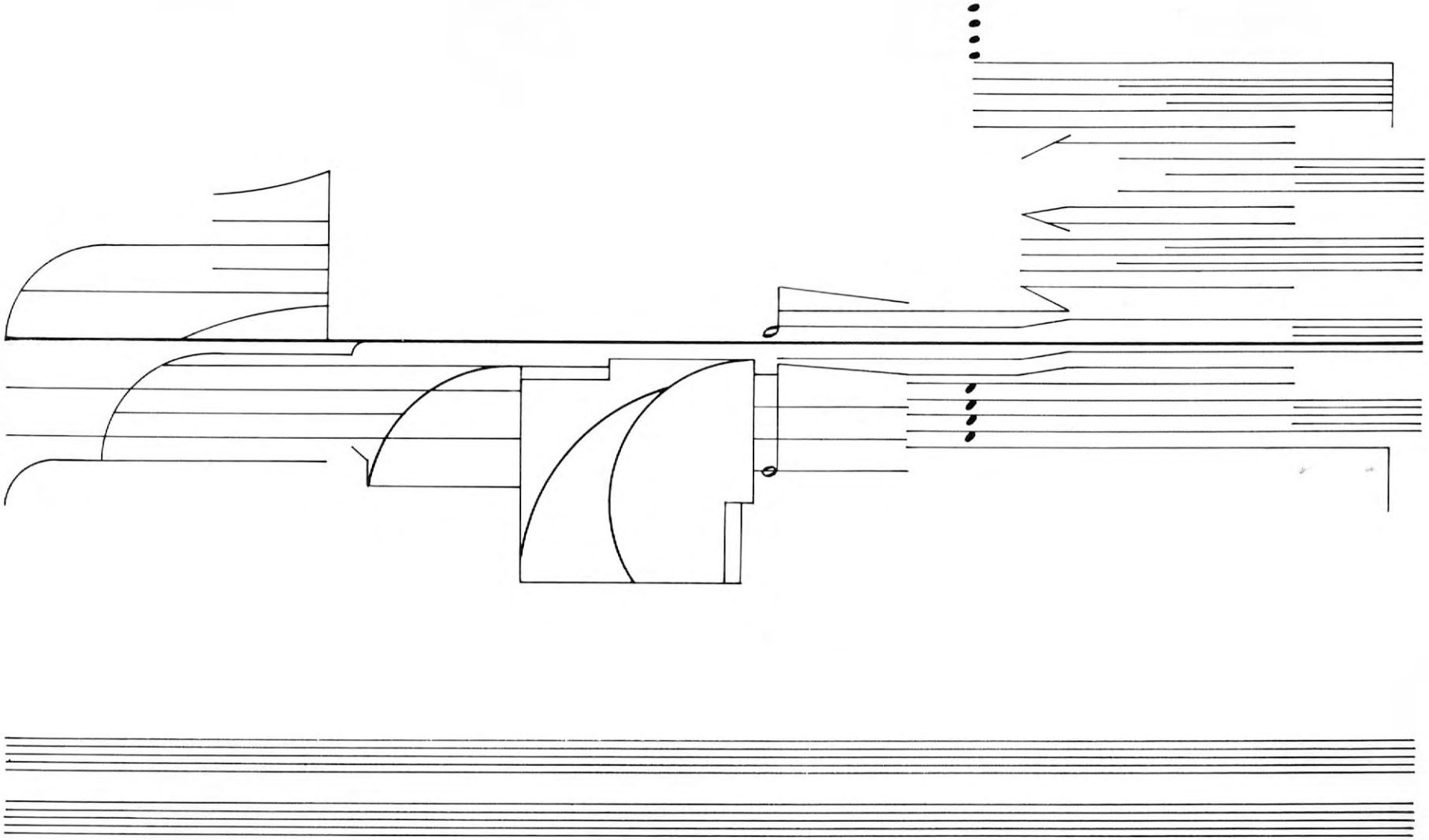

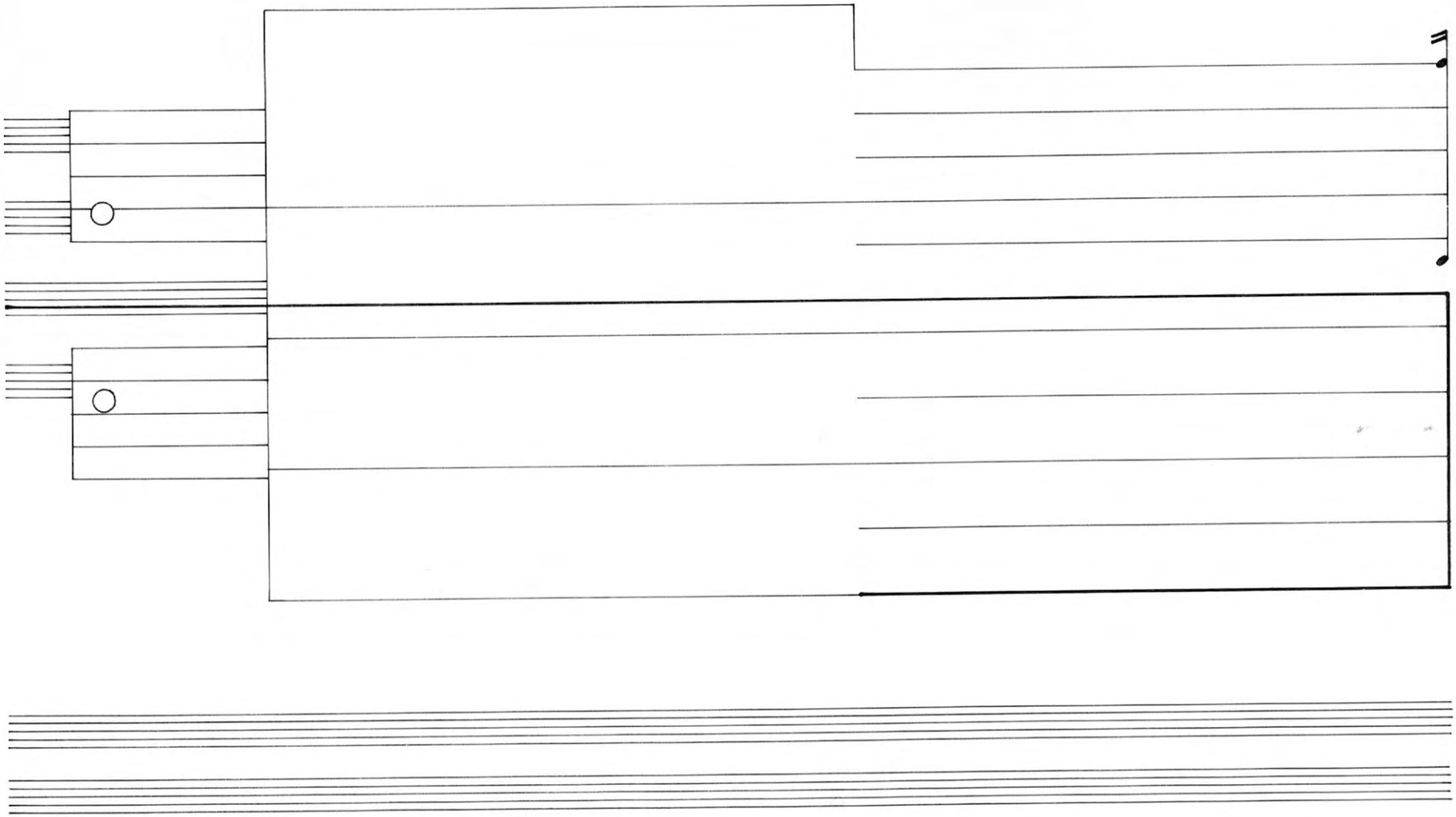

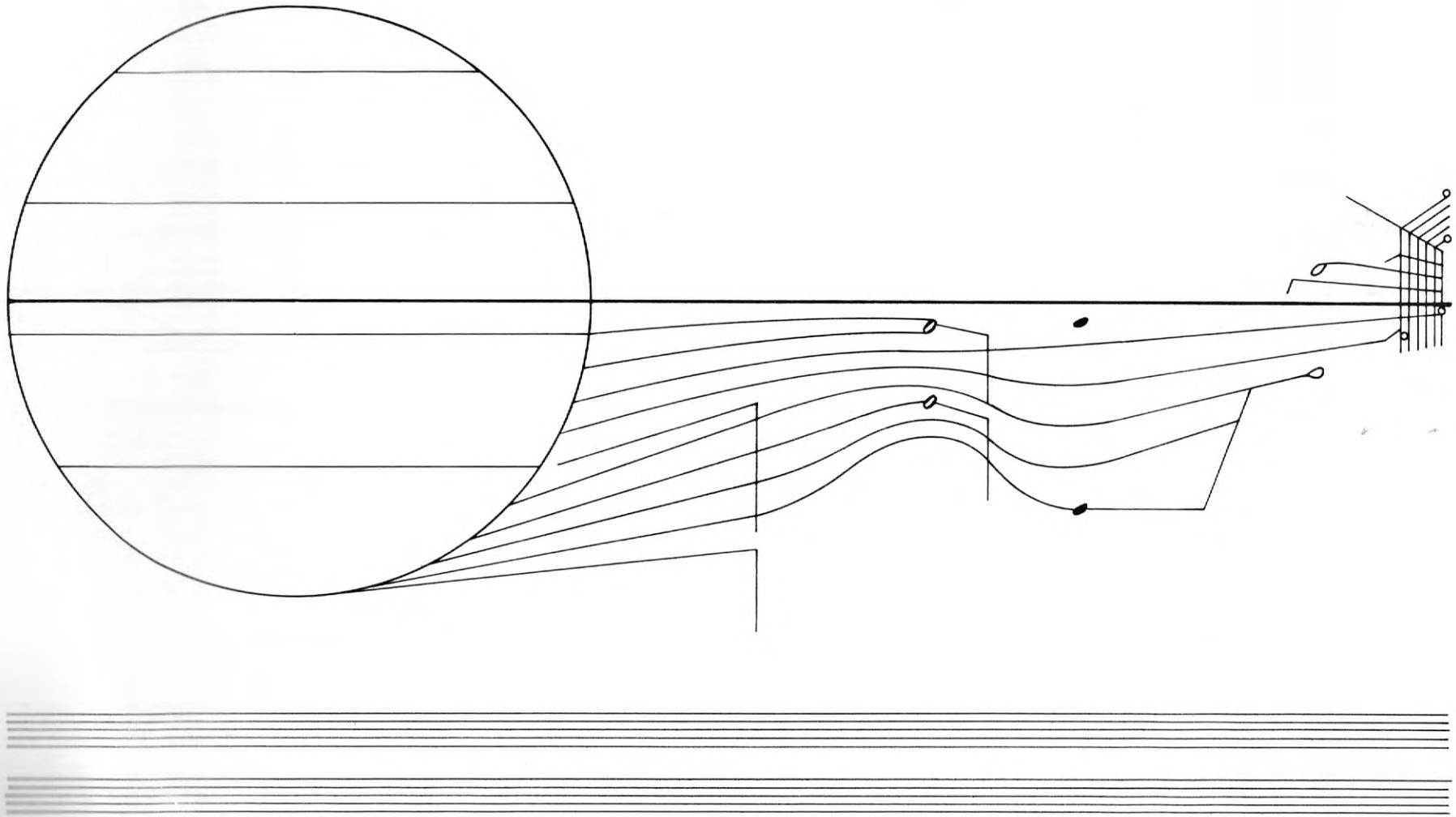

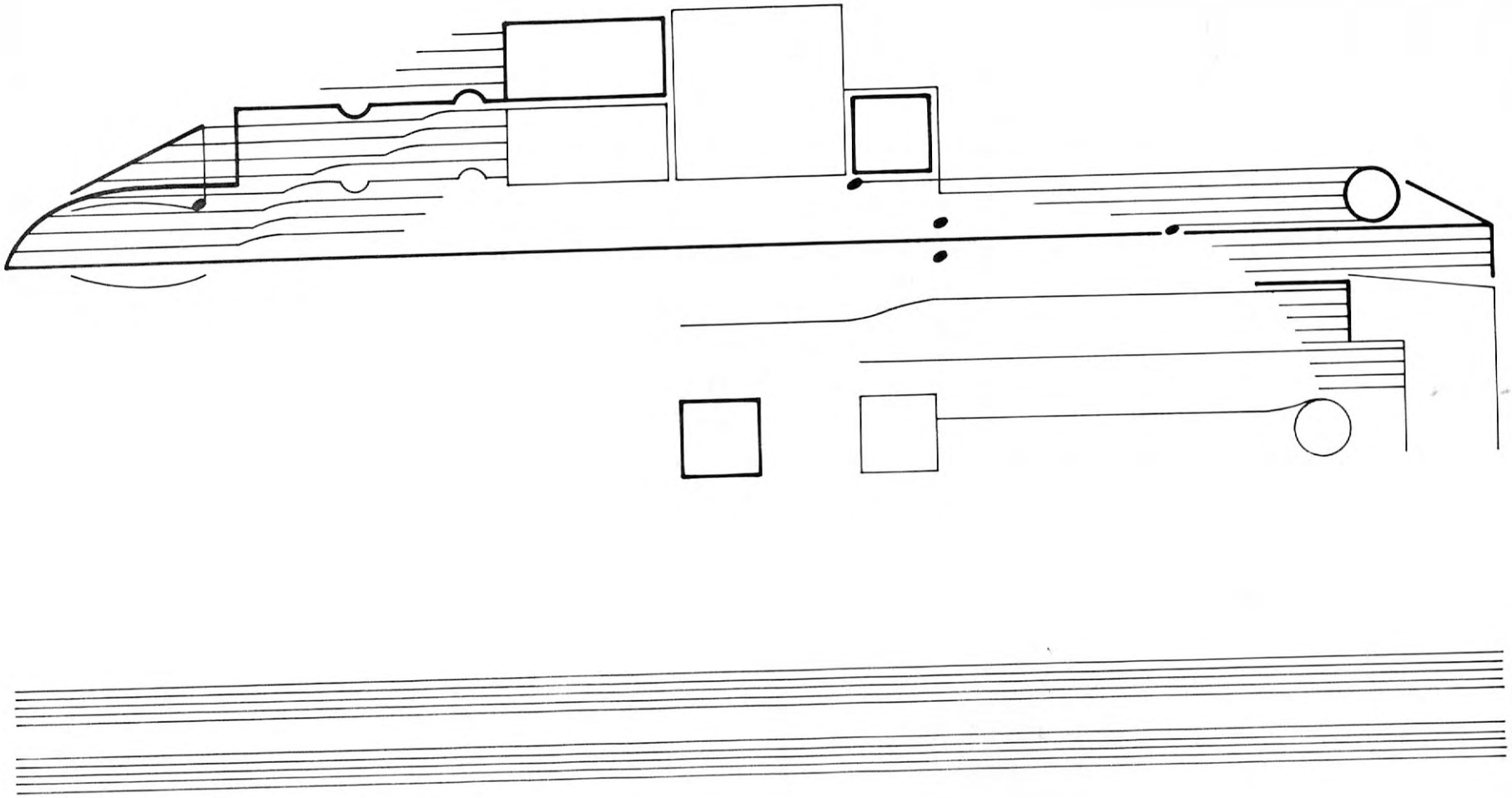

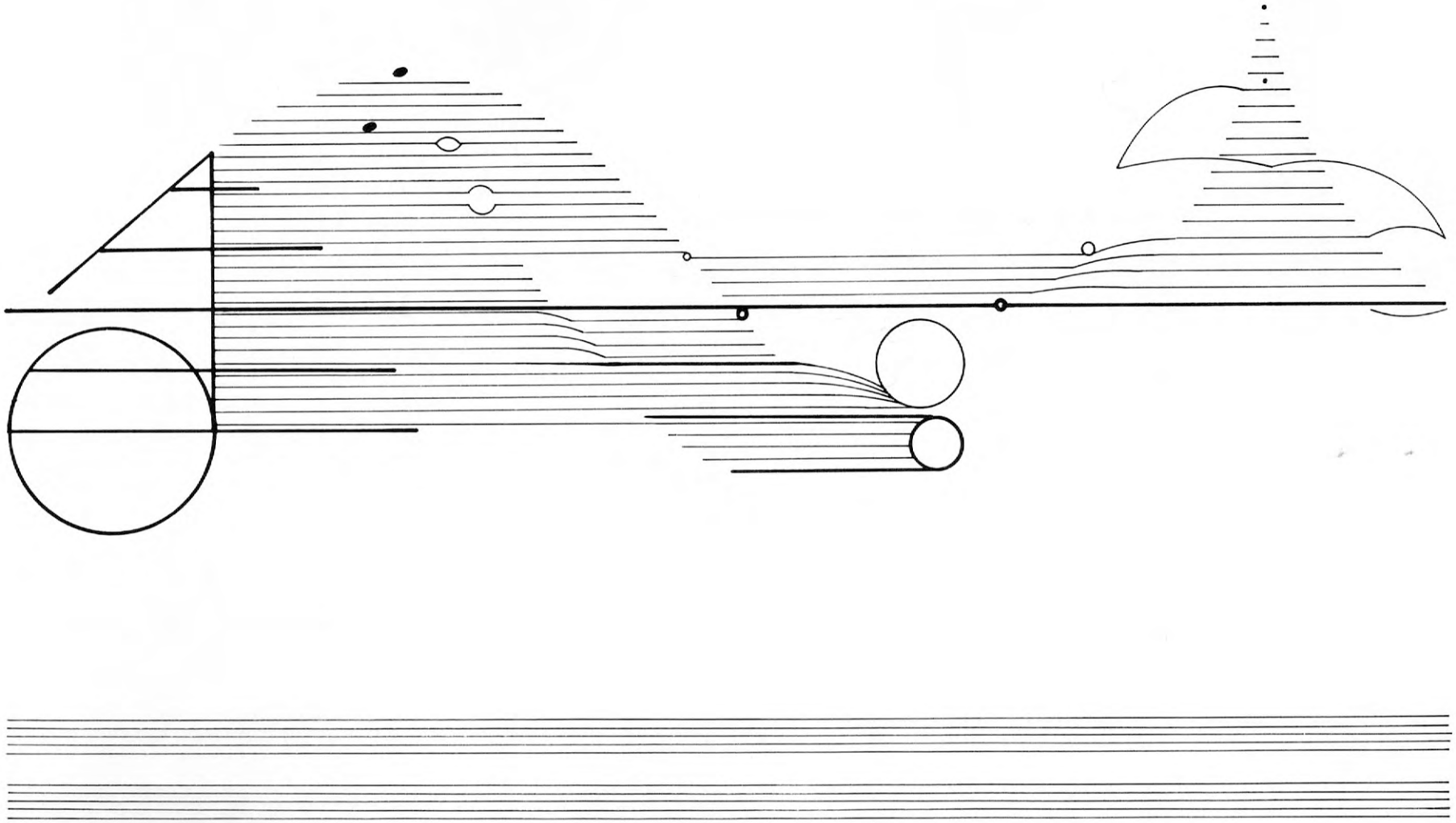

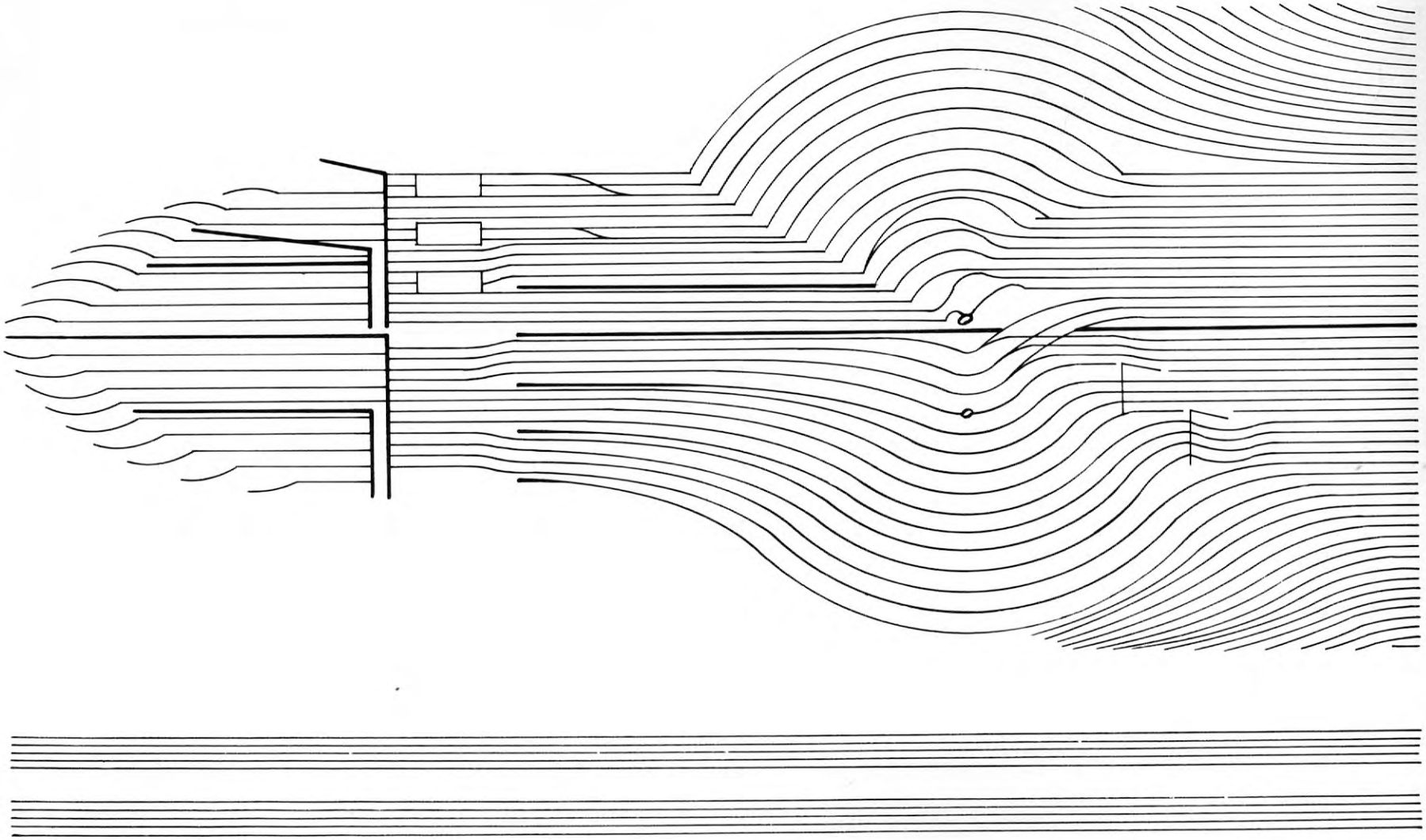

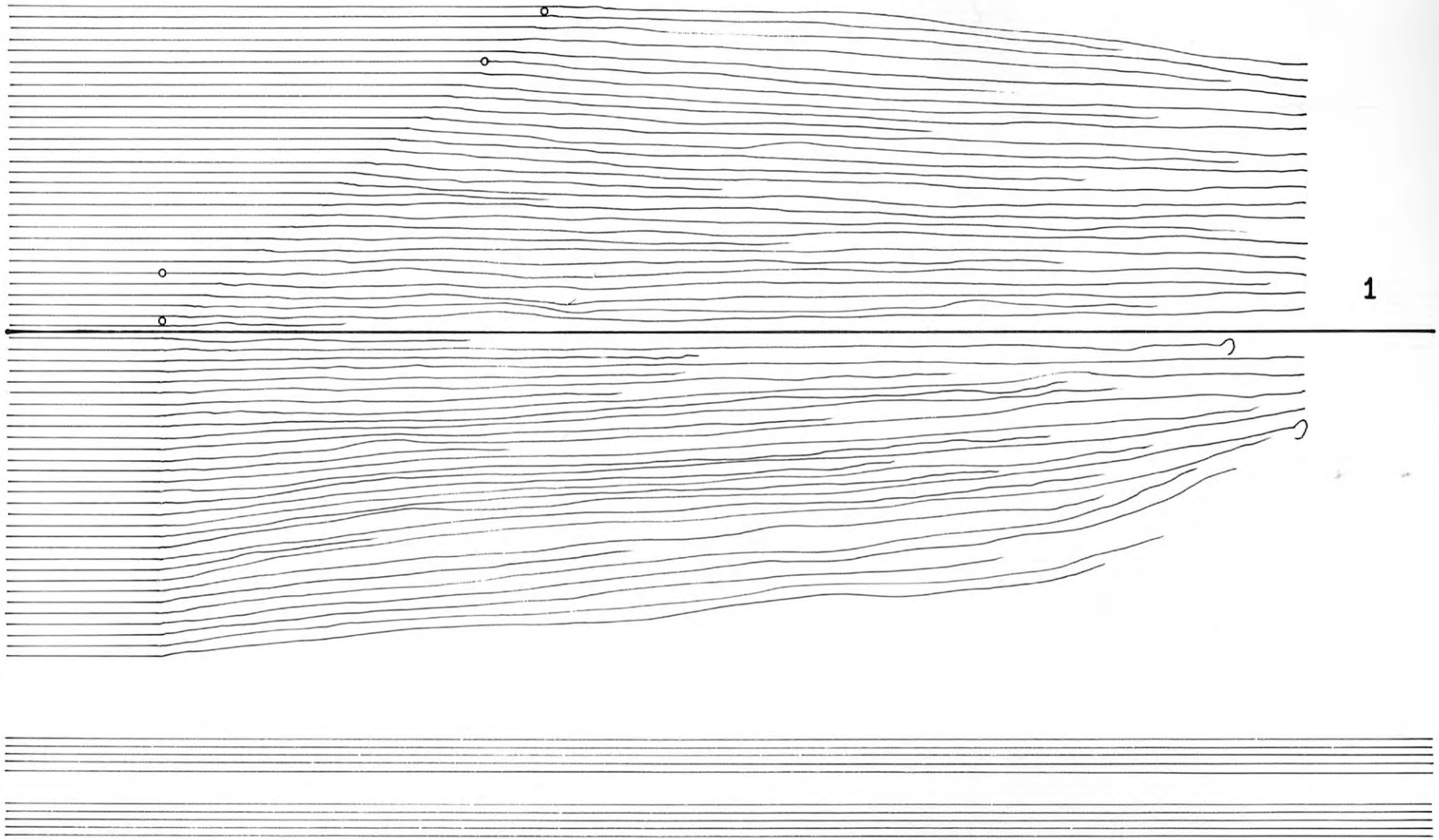
1

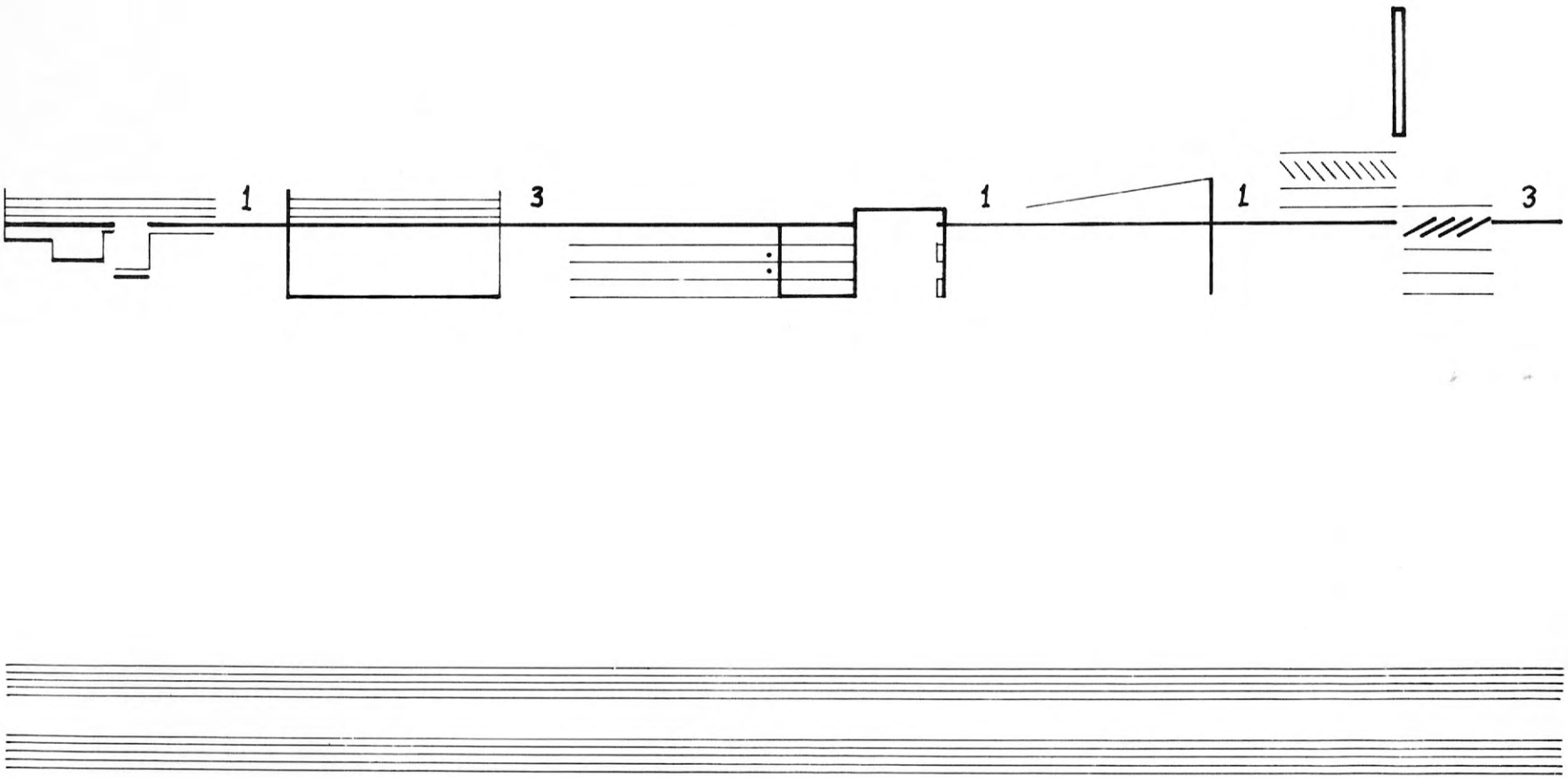
1
3
1
1
3

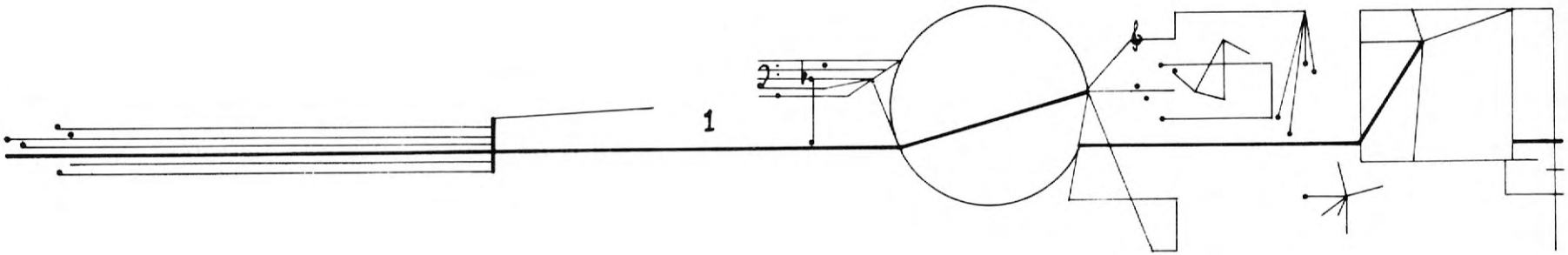
1

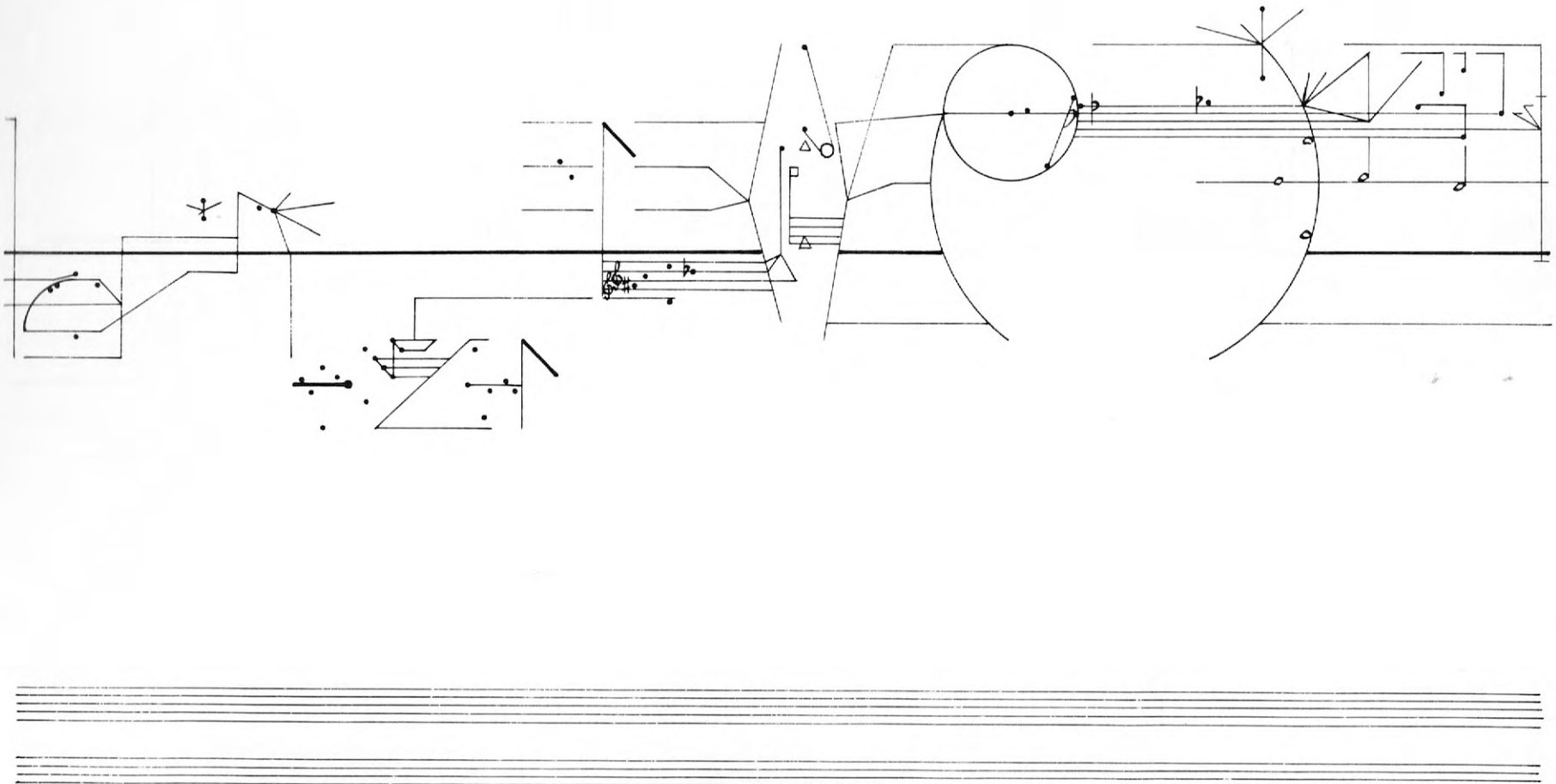

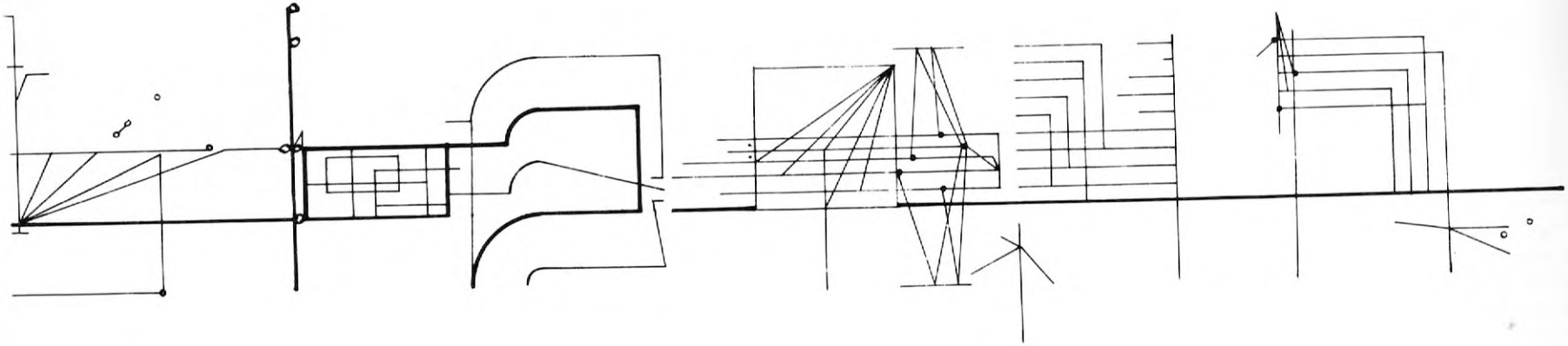

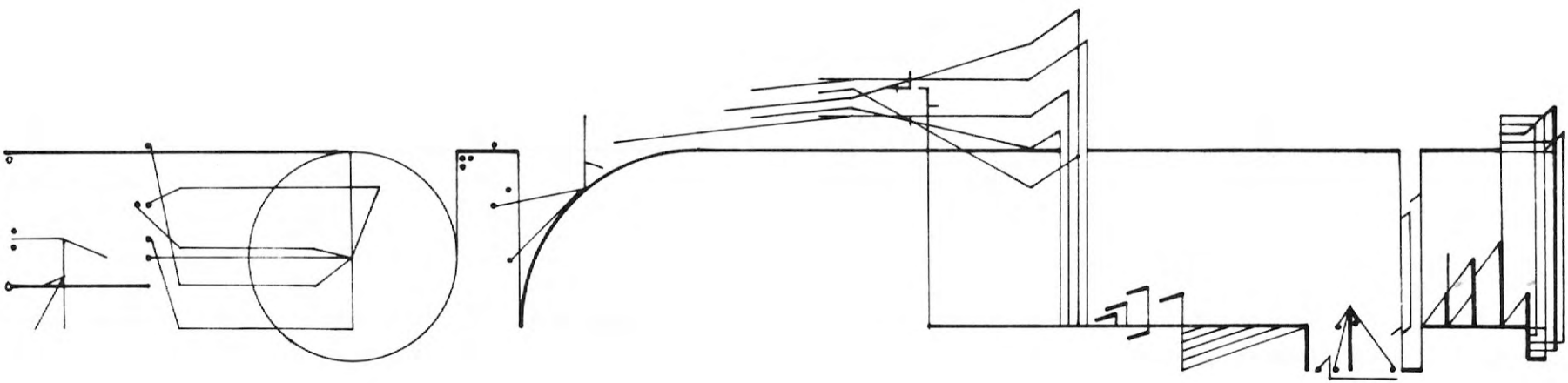

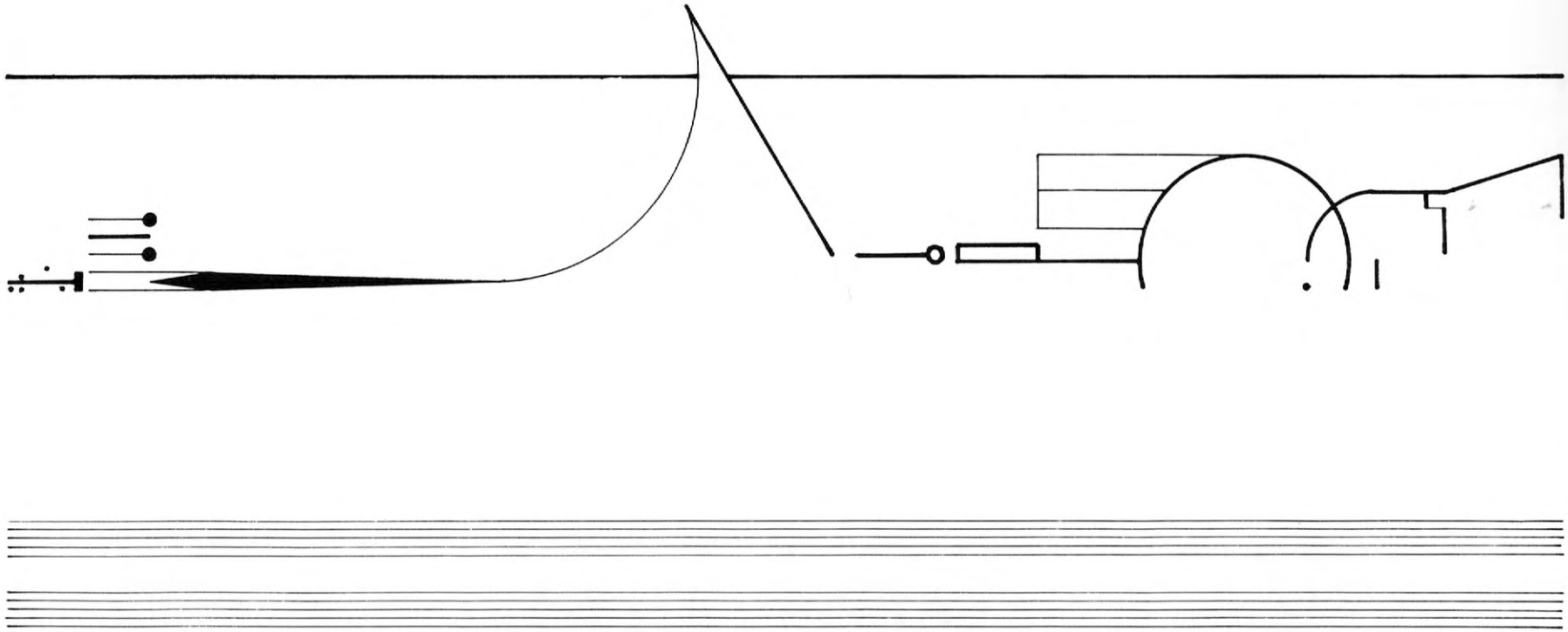

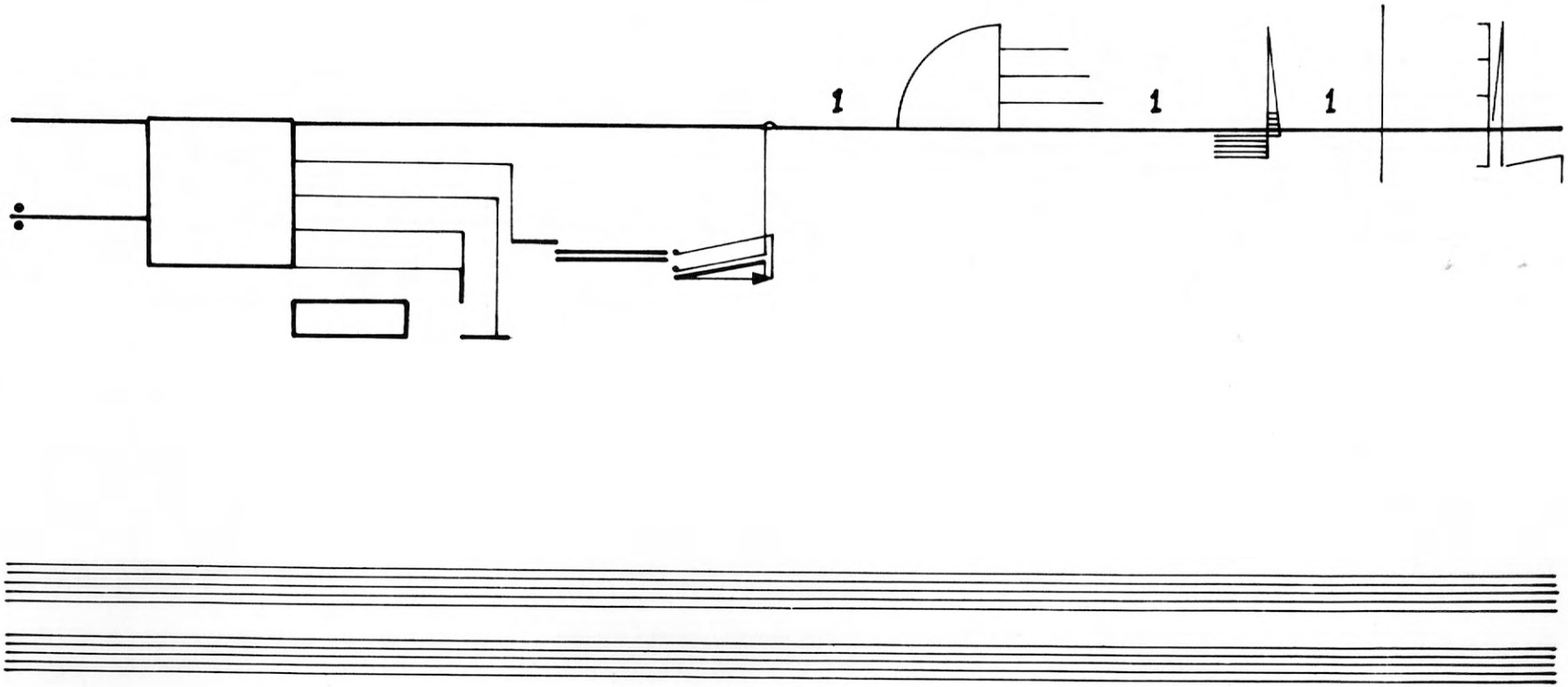
1
1
1

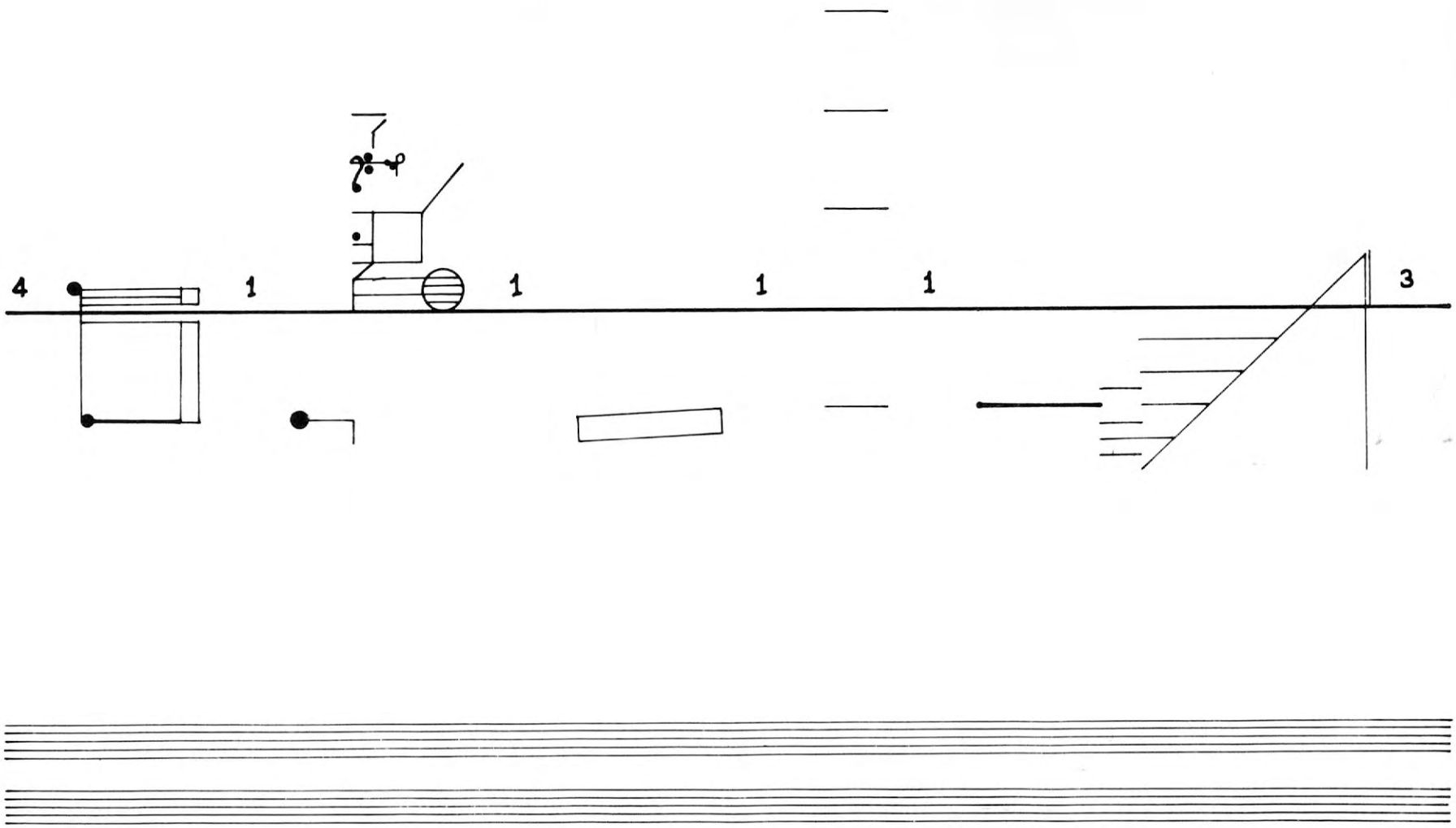
4
1
1
1
1
3

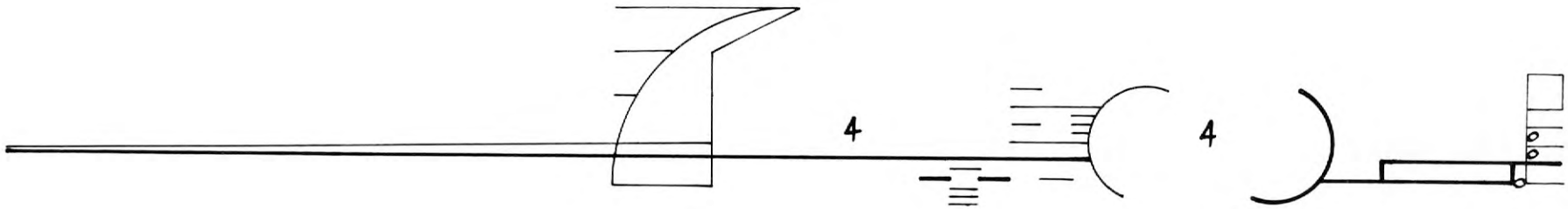
4
4

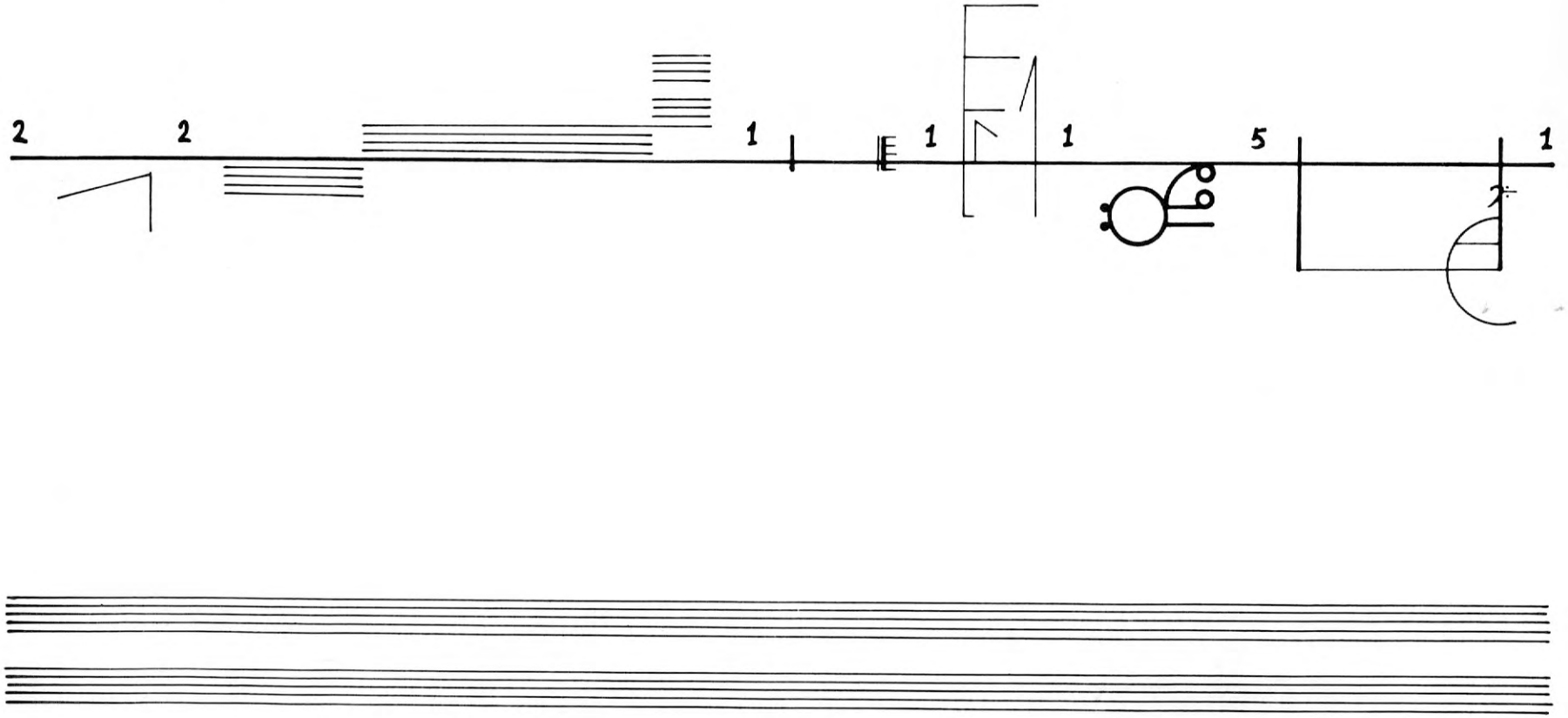
2
2
1
1
1
5
1

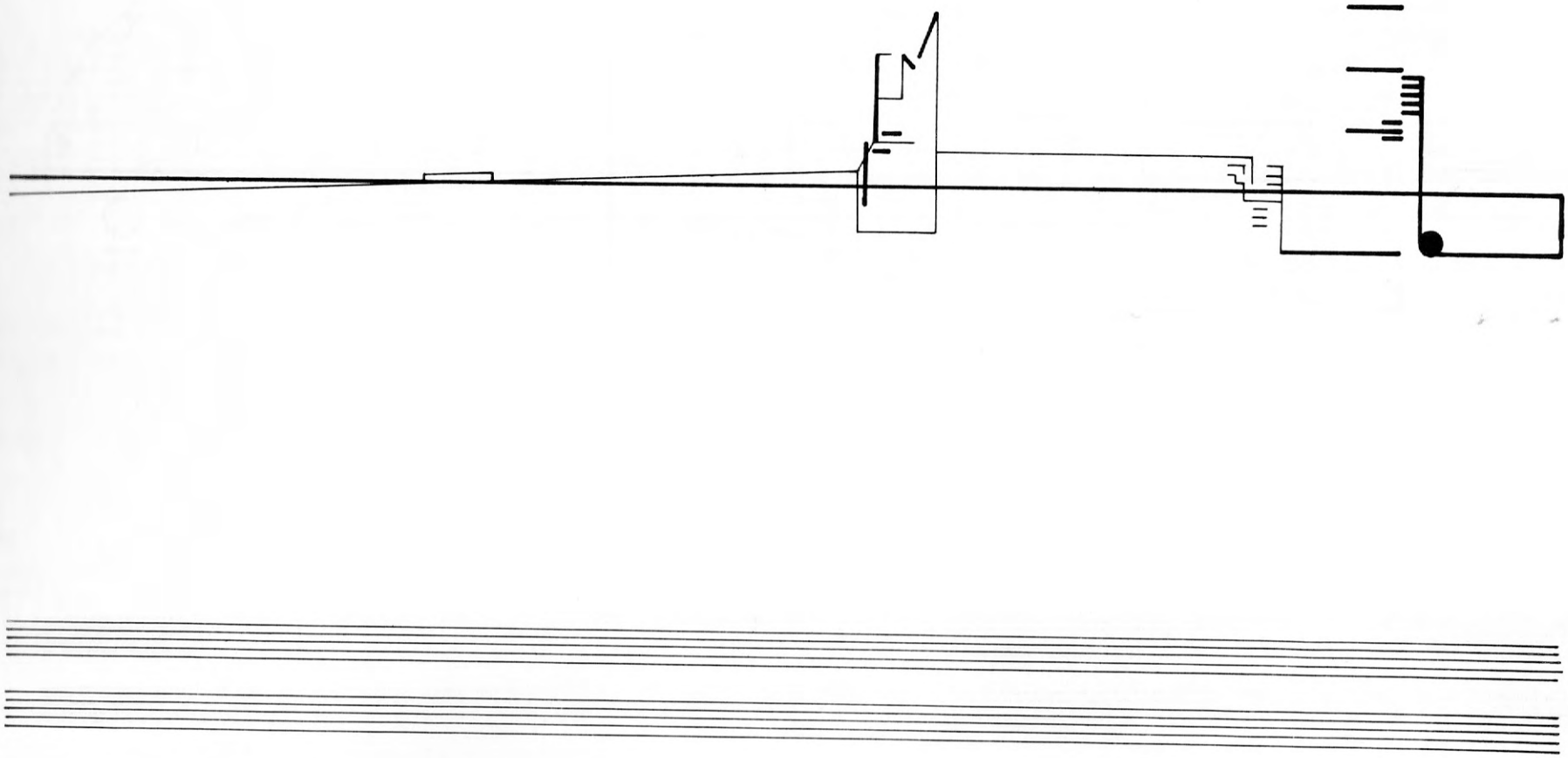

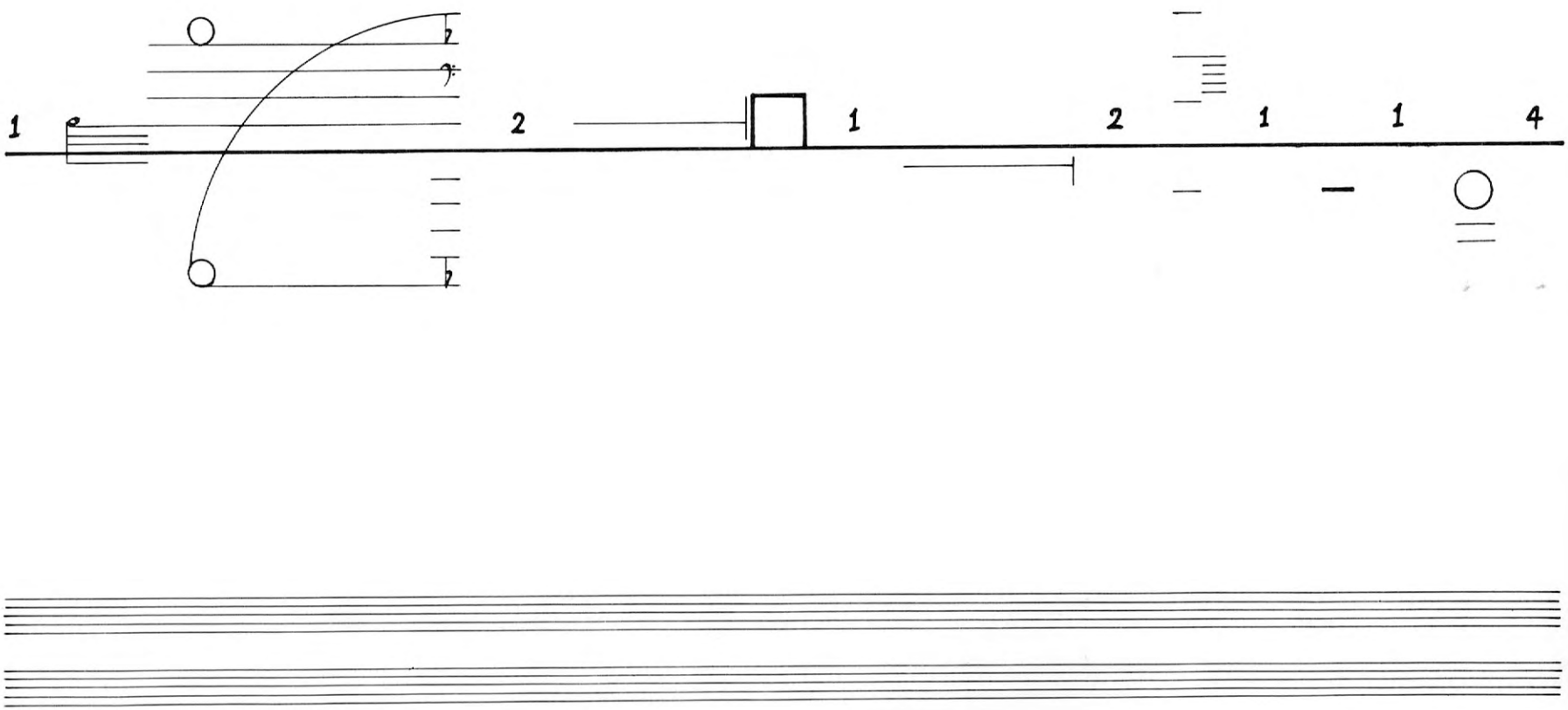
1
2
1
2
1
1
4

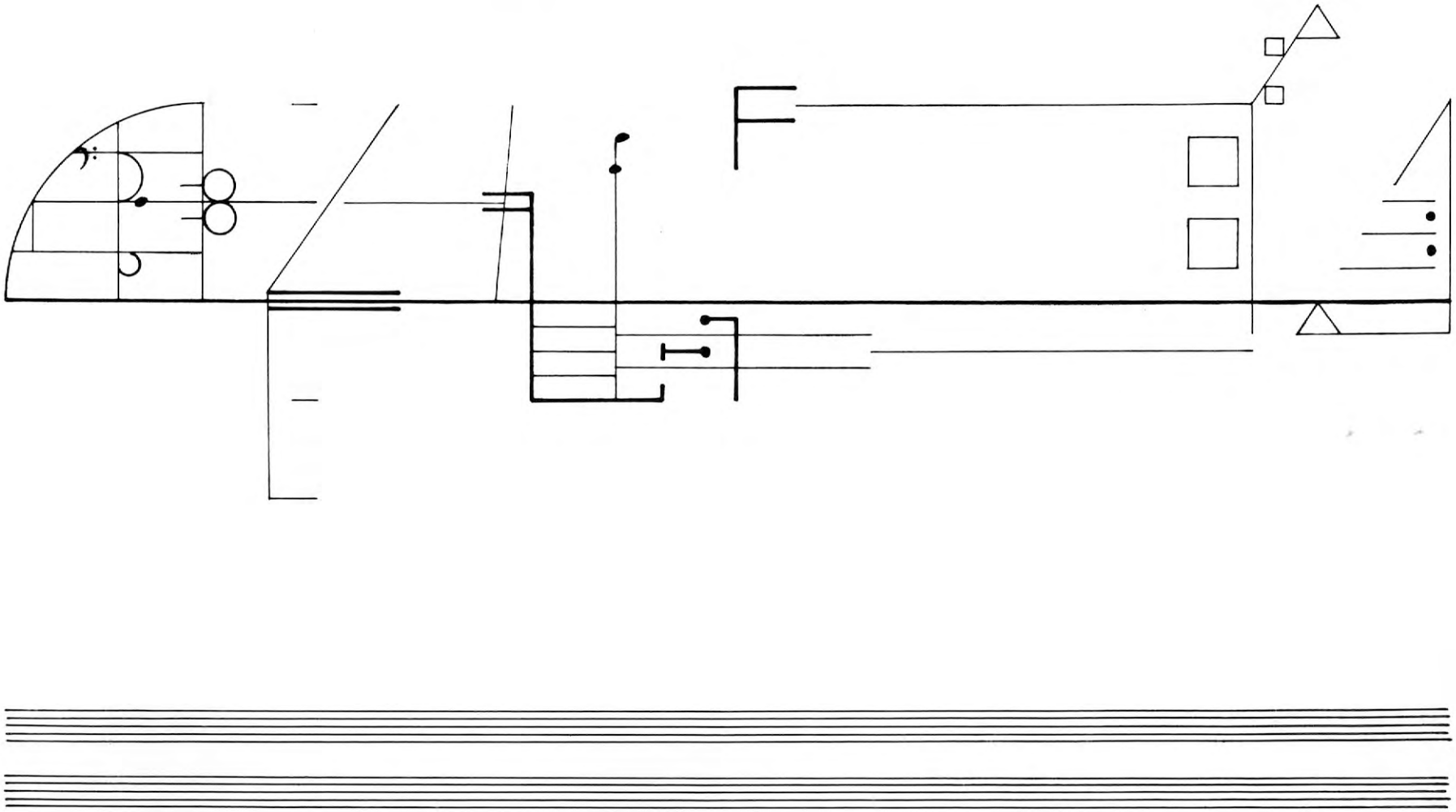

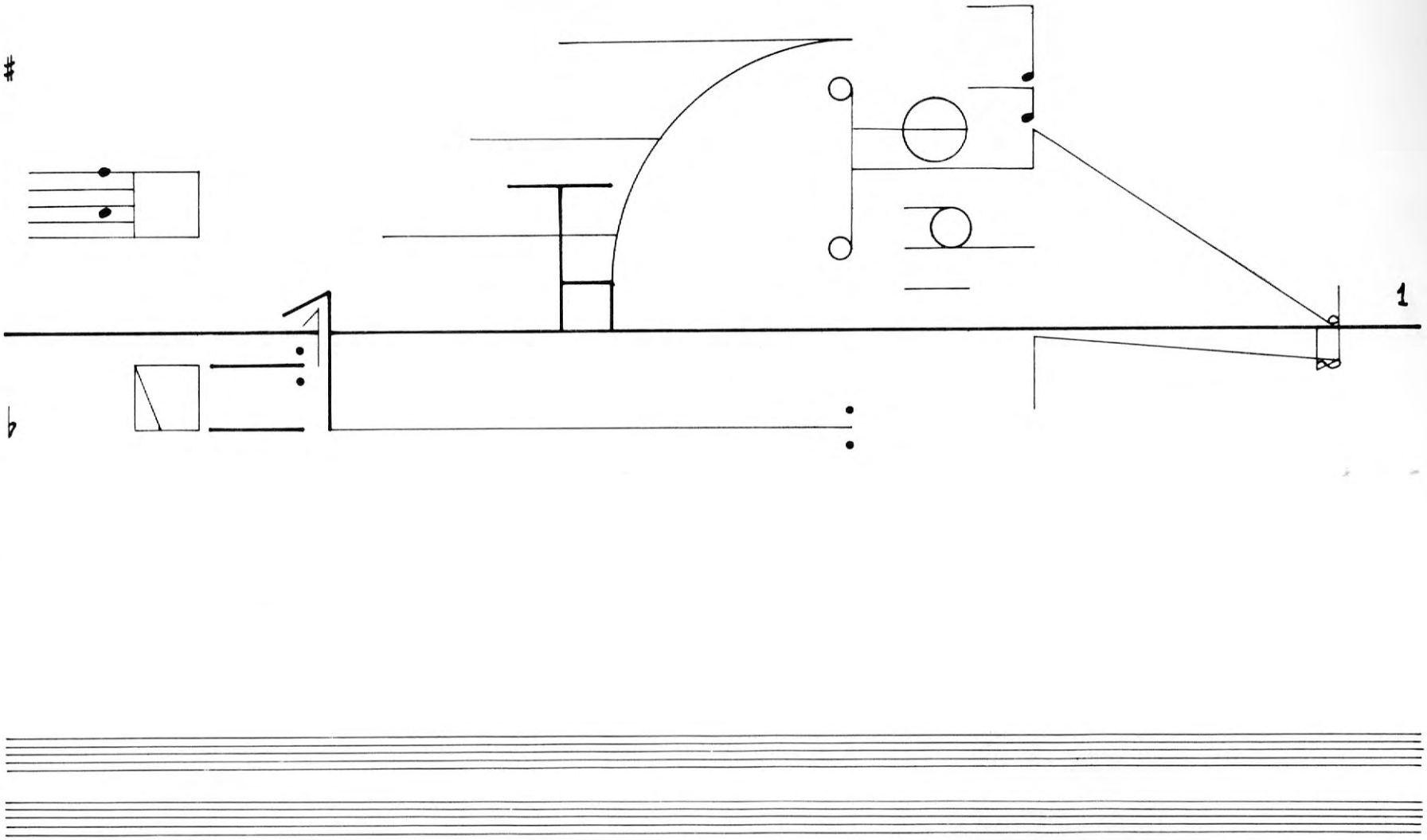
4
1
#

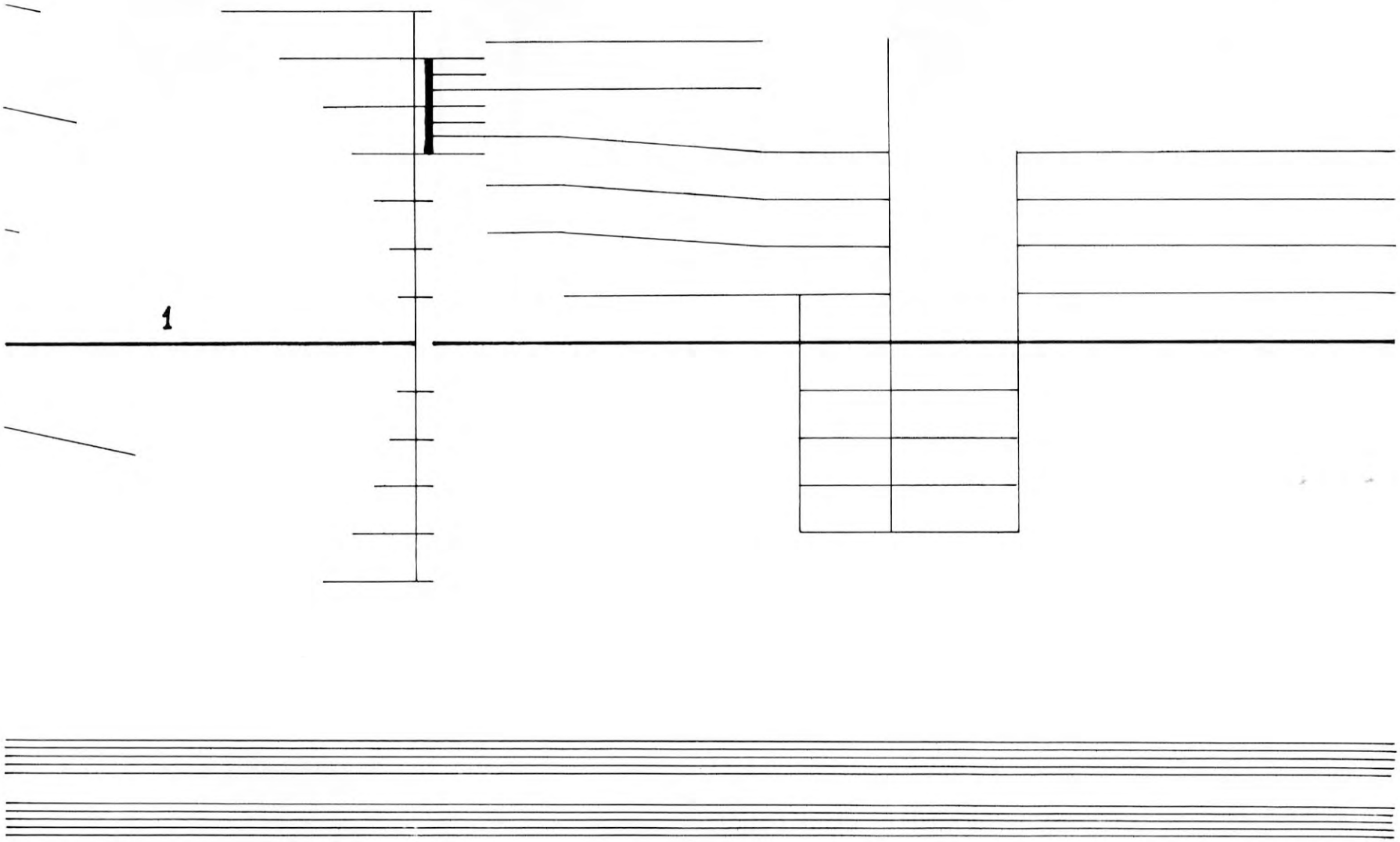
1

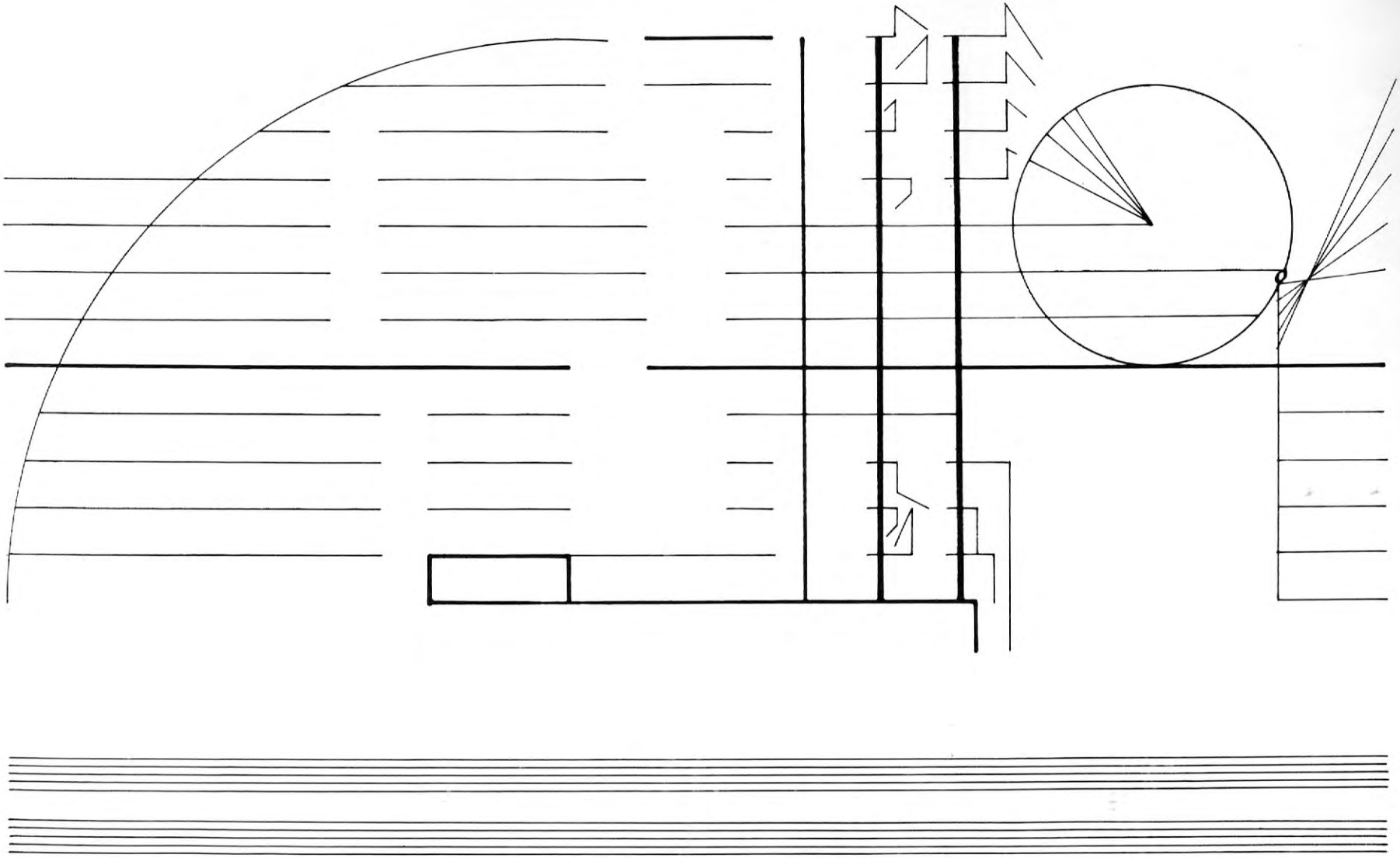

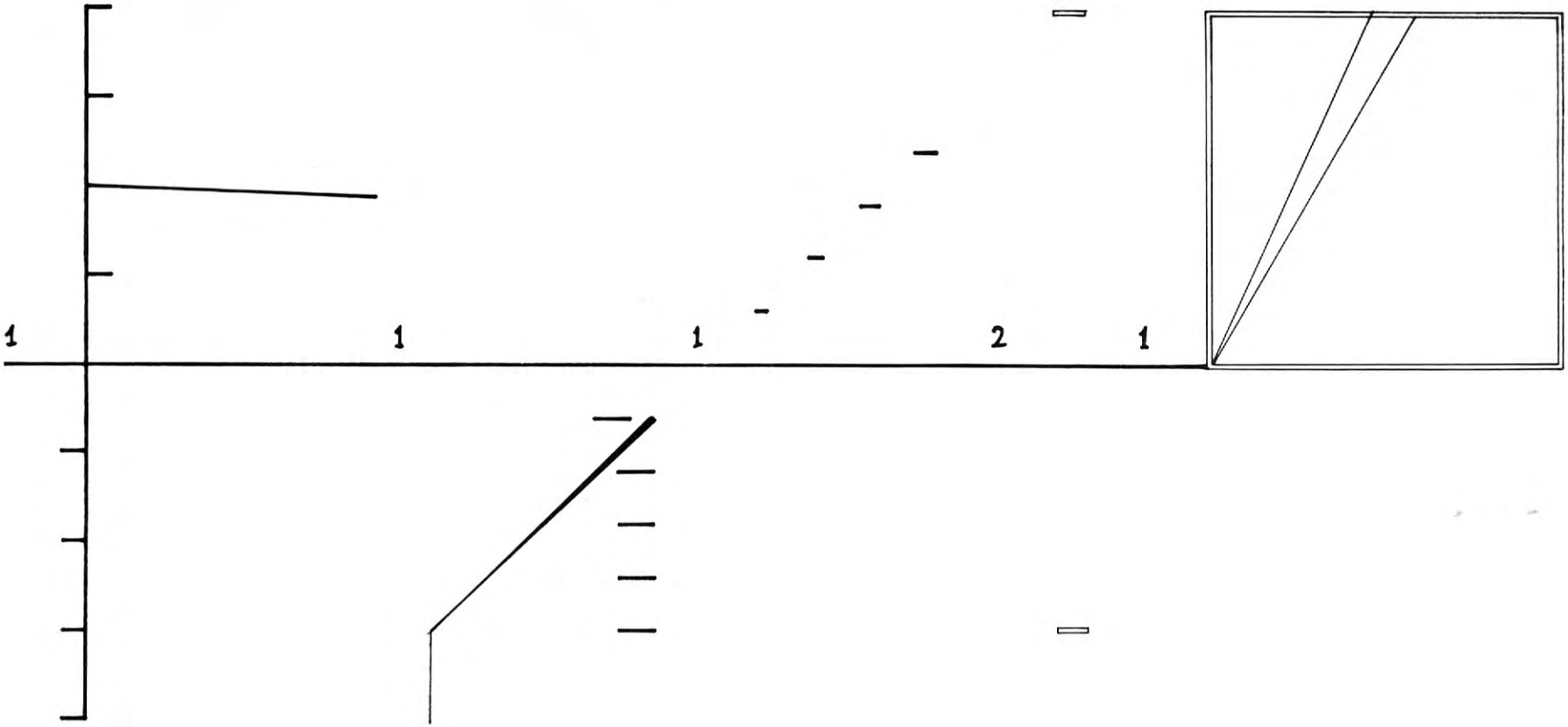
1
1
1
2
1

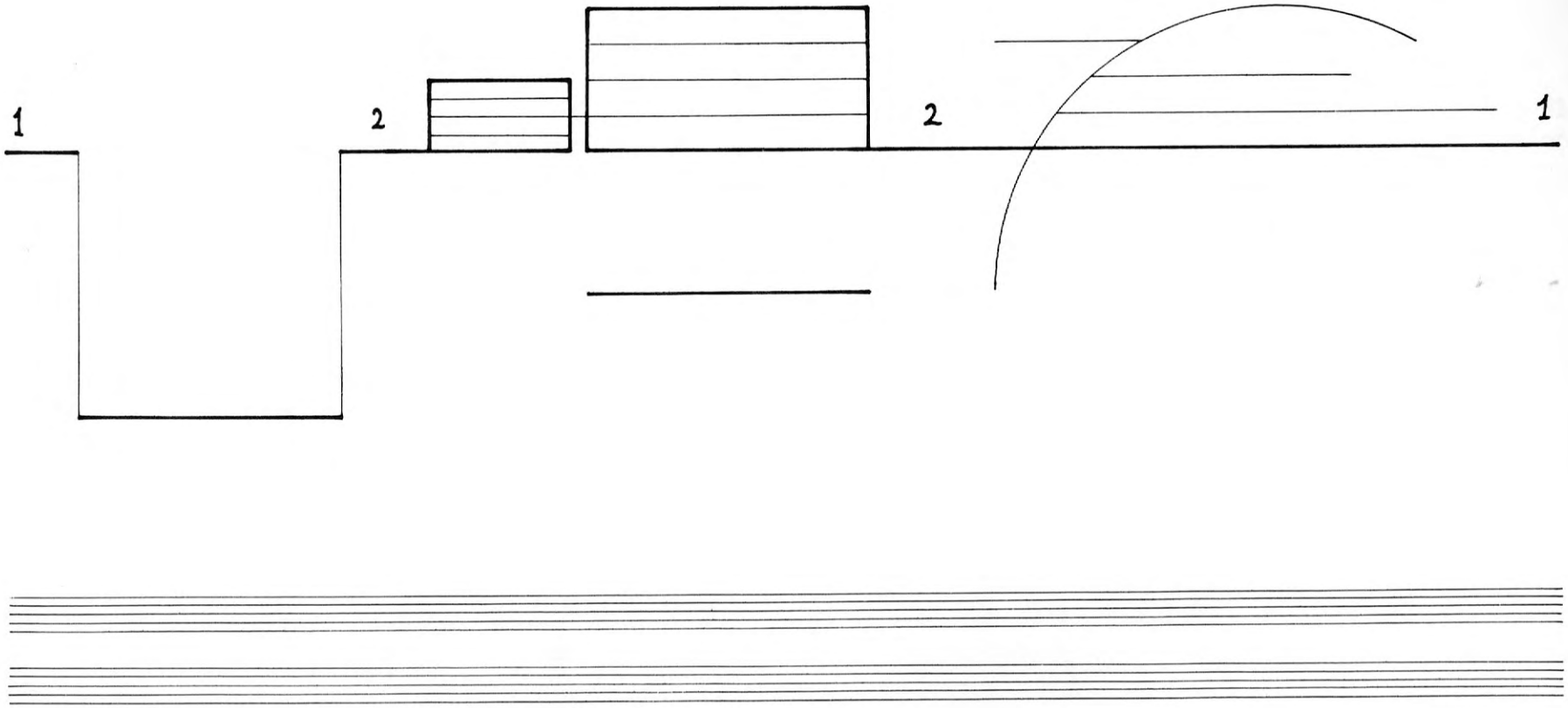
1
2
2
1

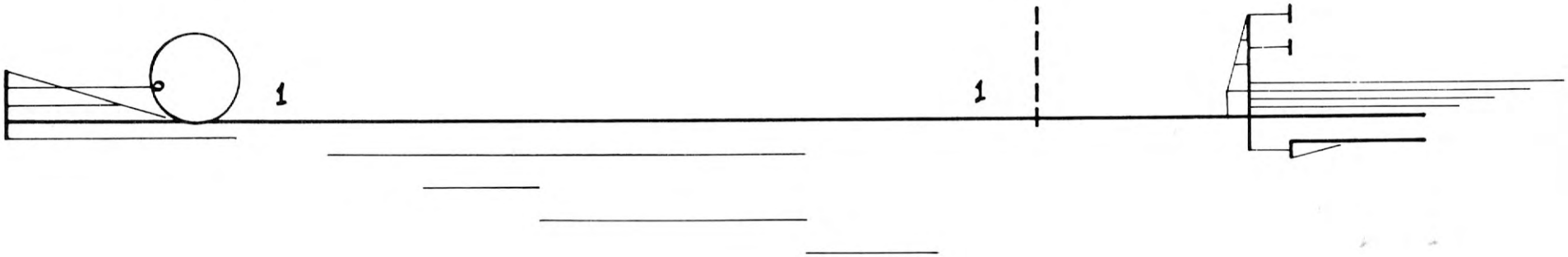
1
1

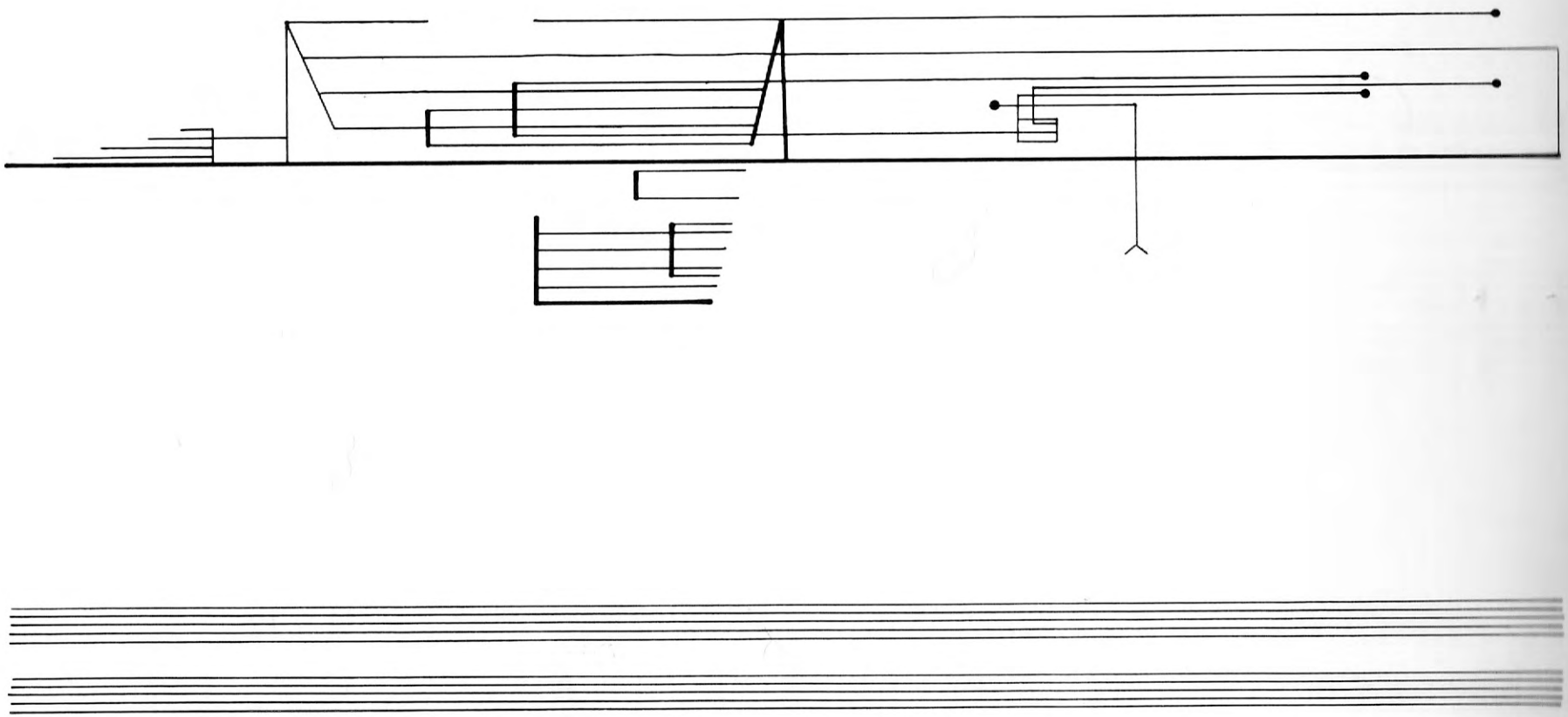

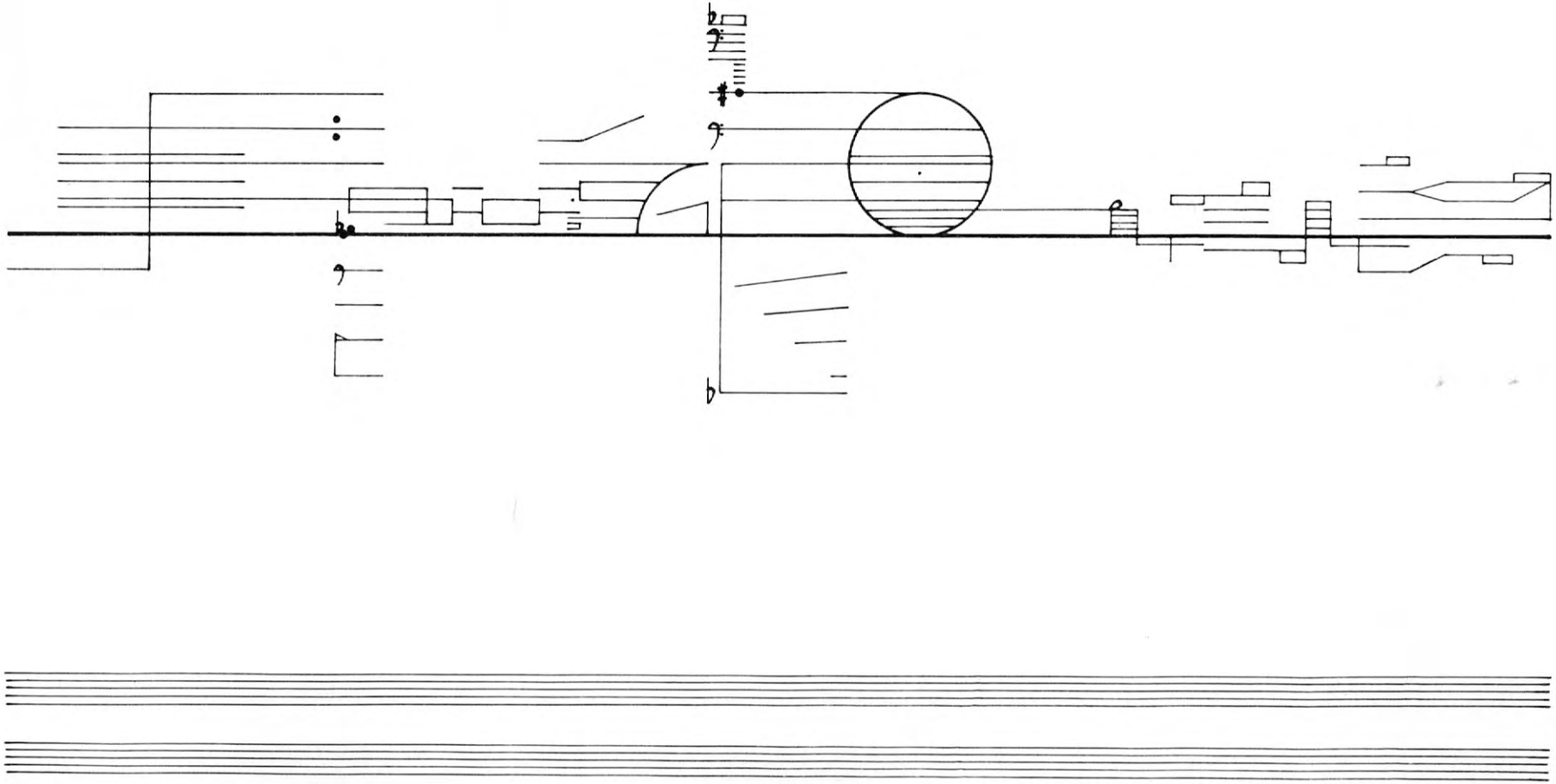

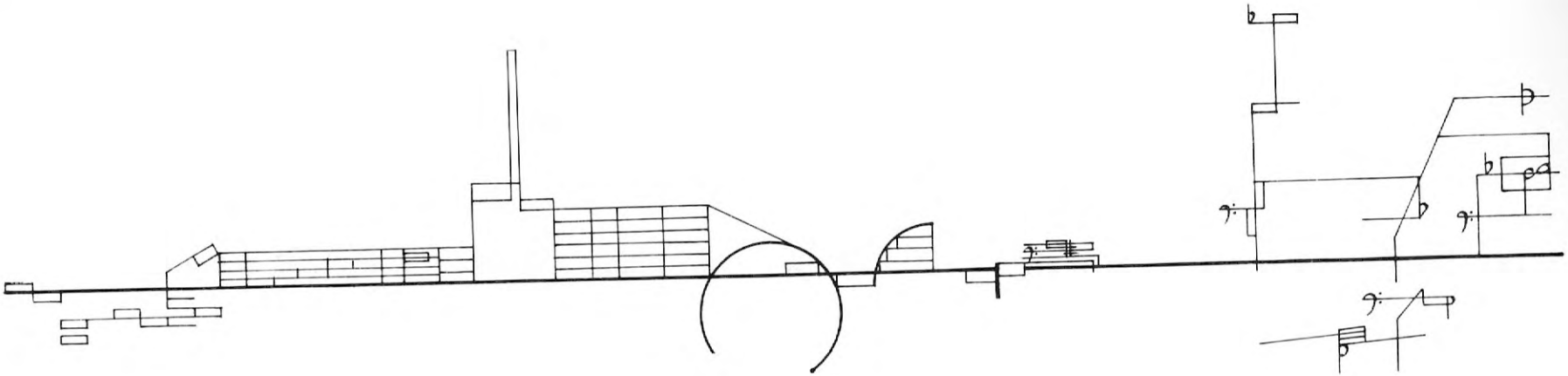

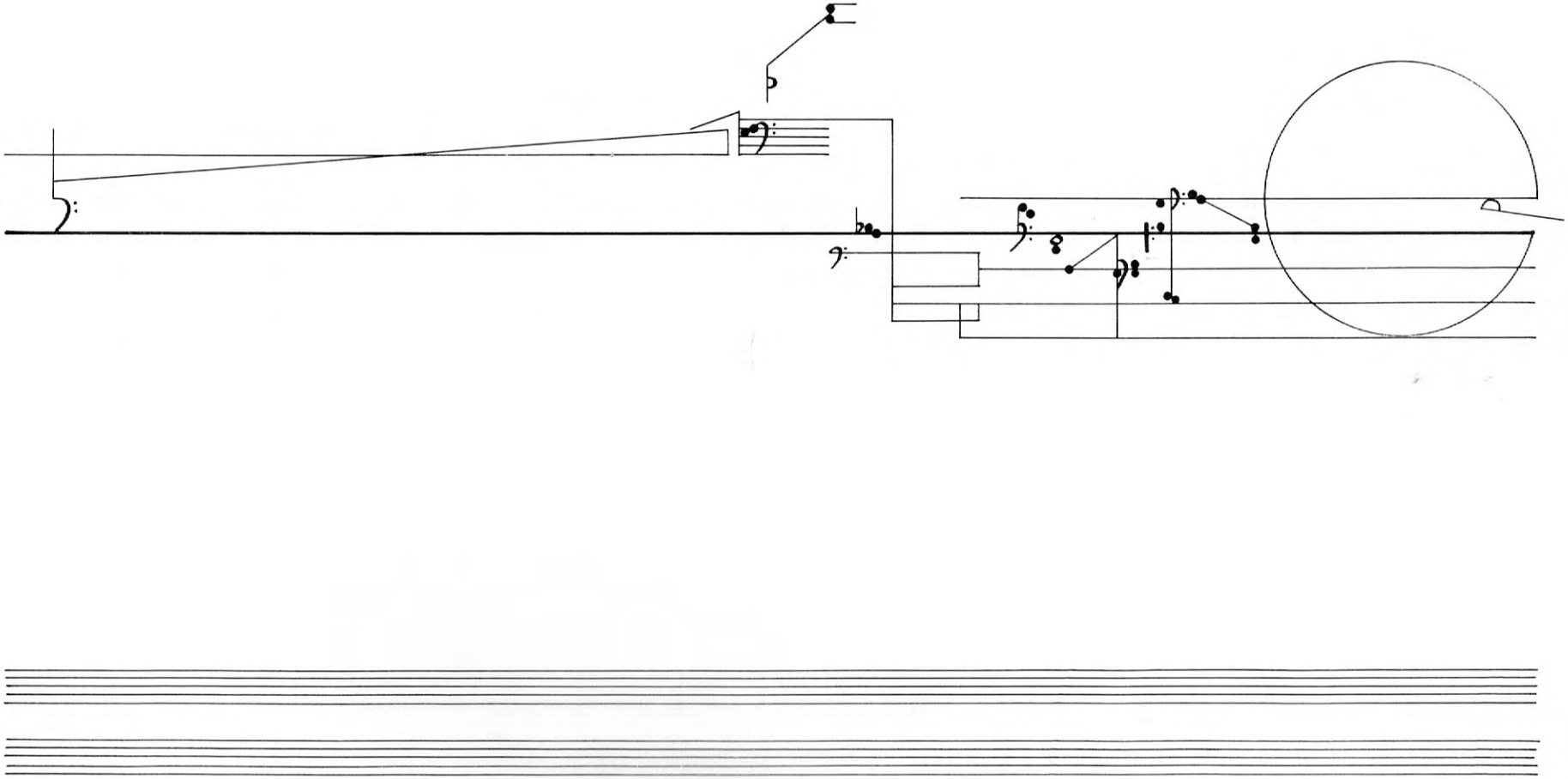

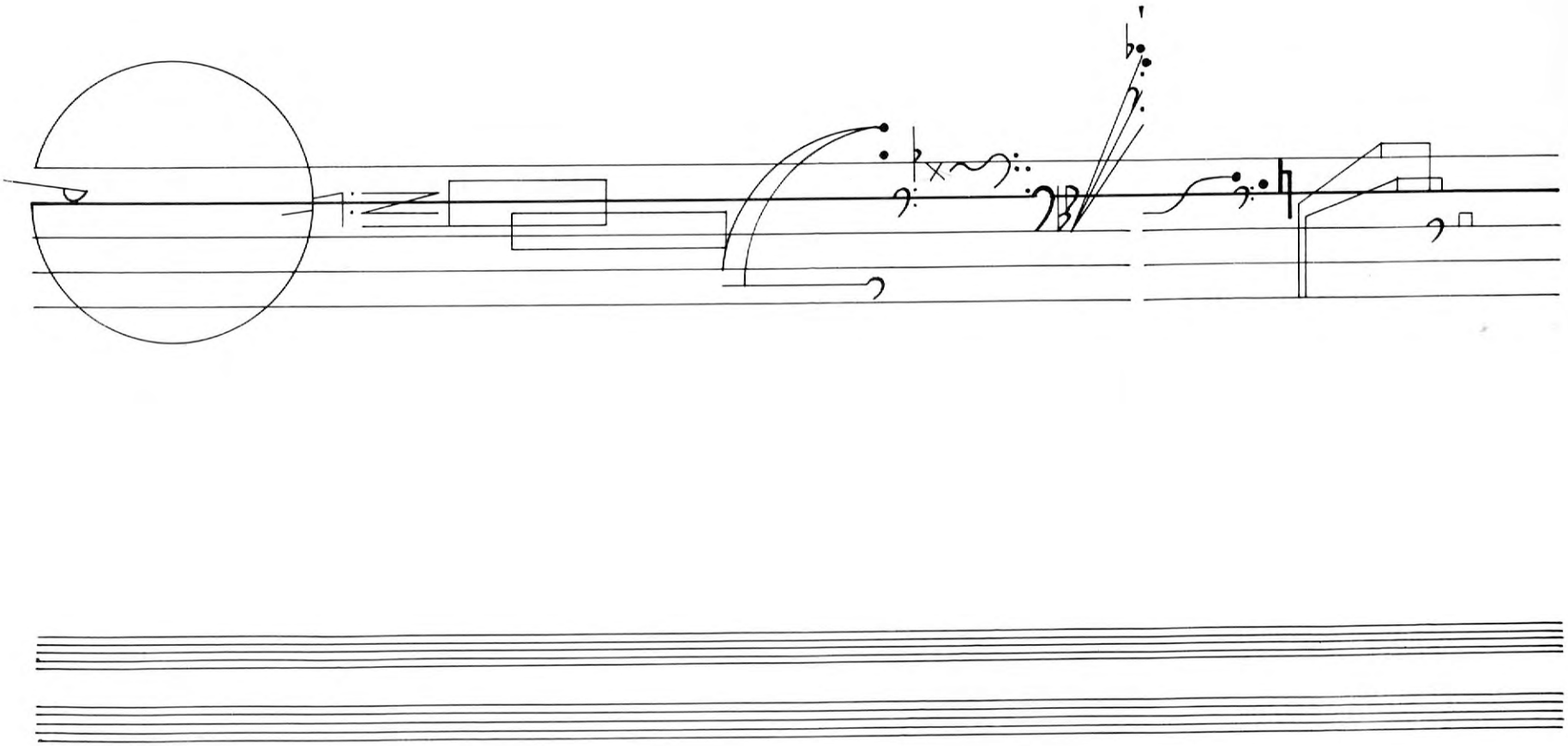

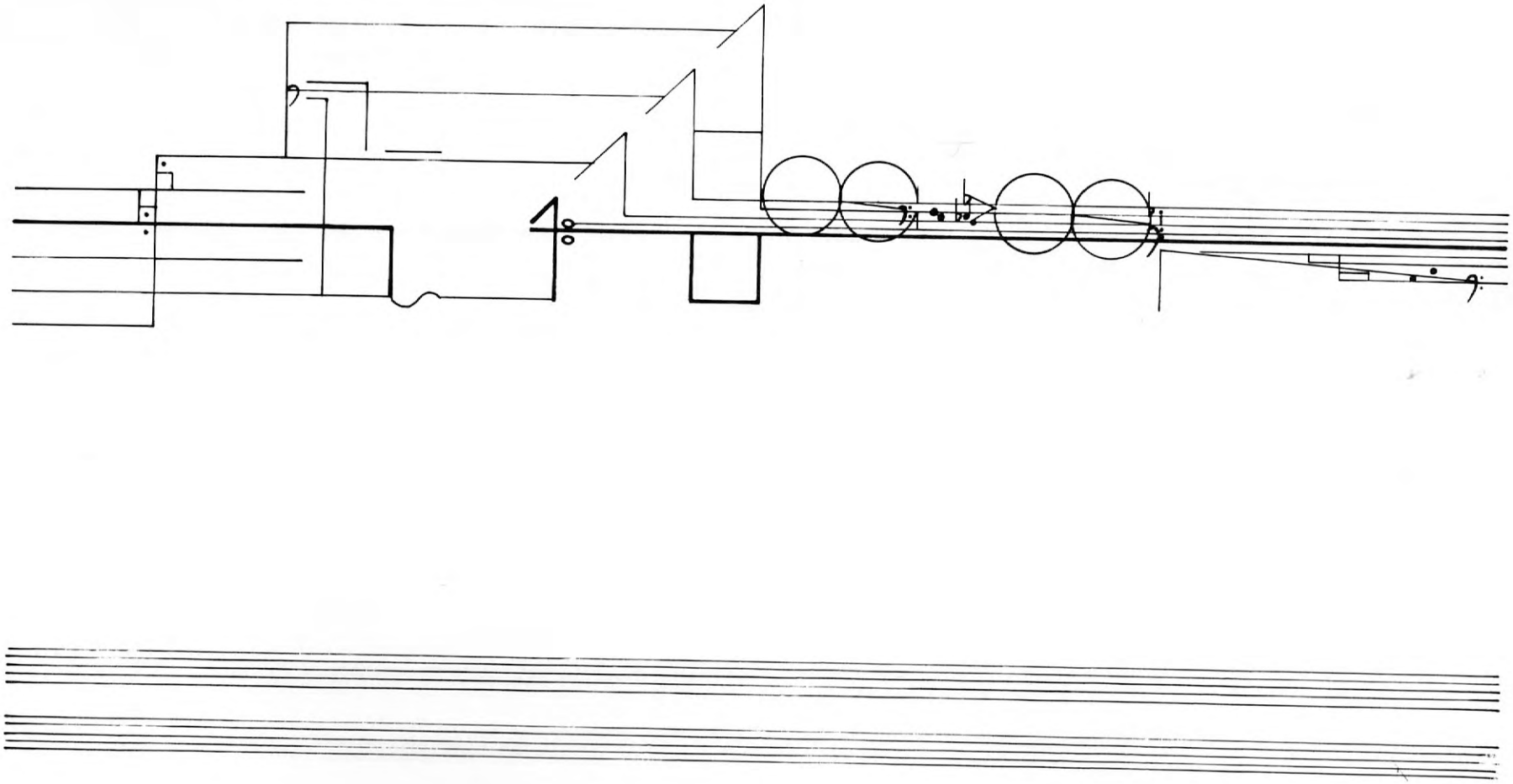

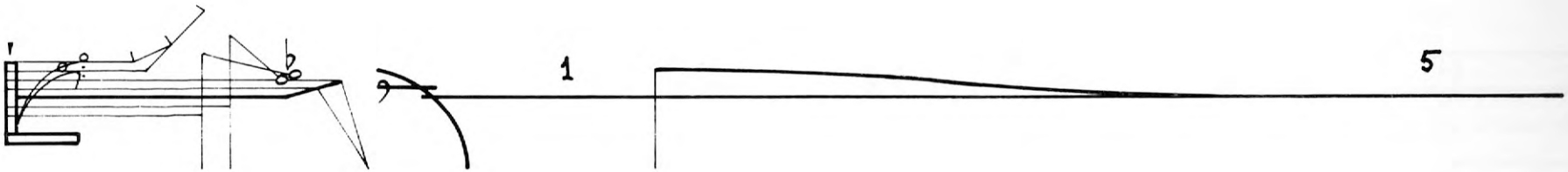
1
5

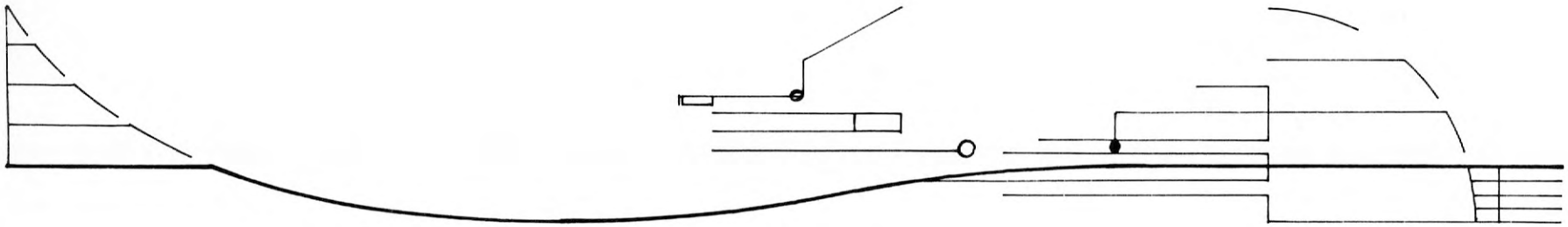

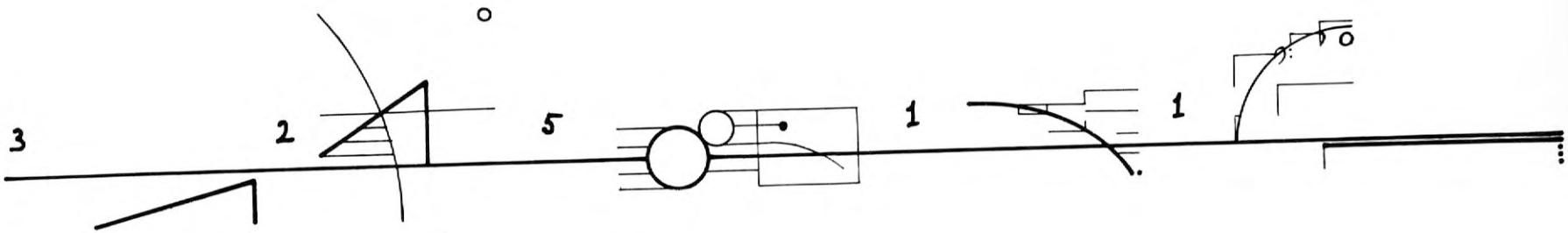
3
2
5
1
1

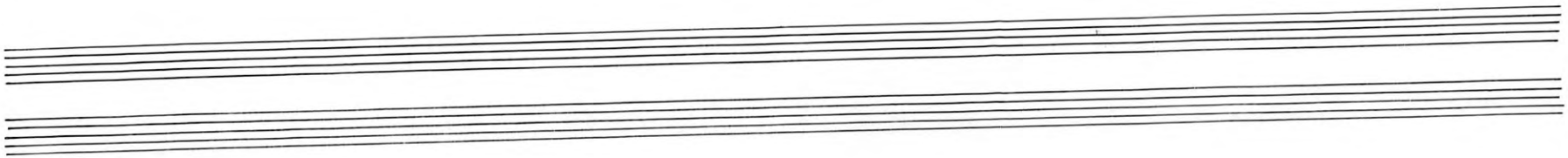

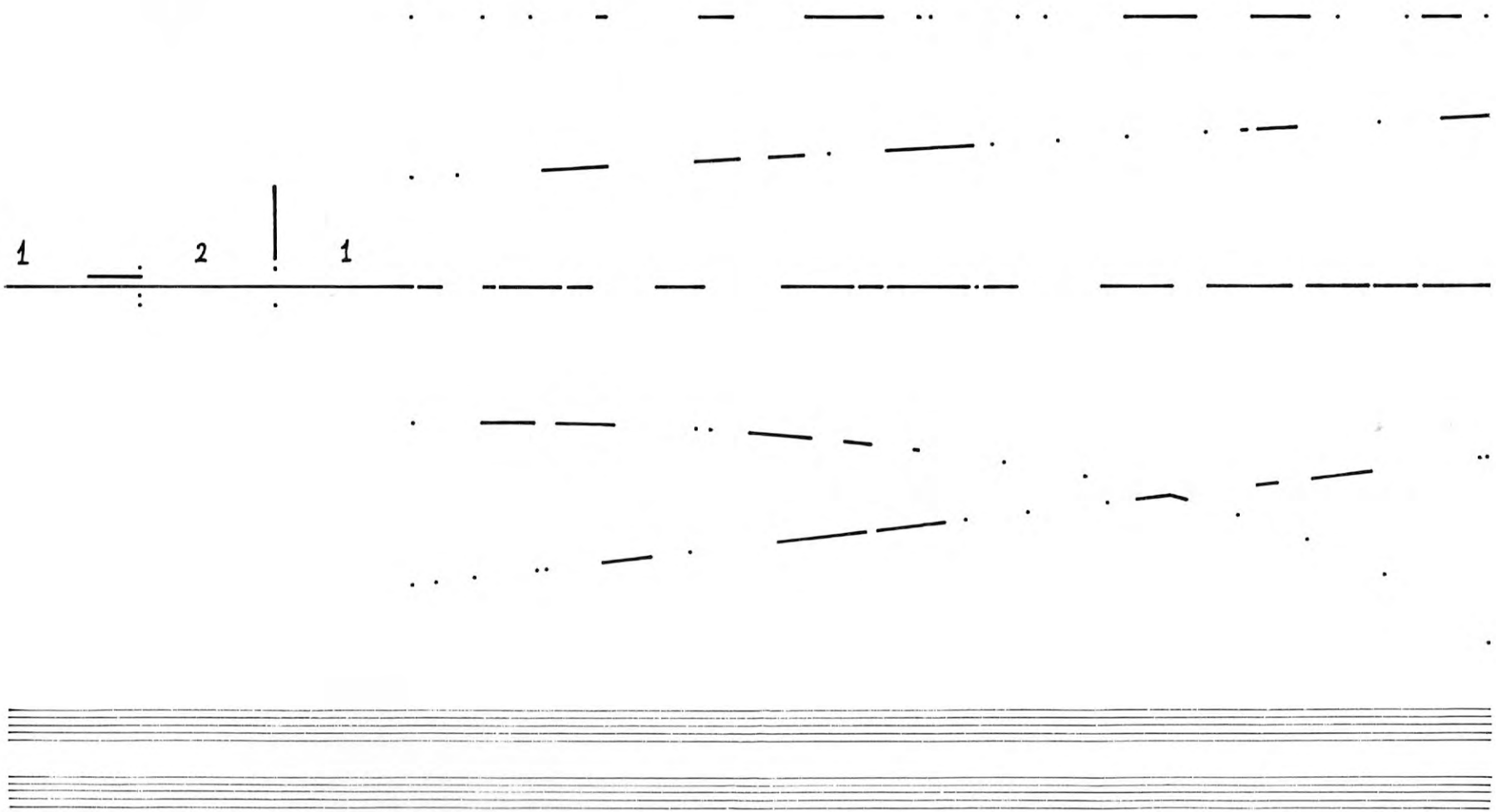
1
2
1

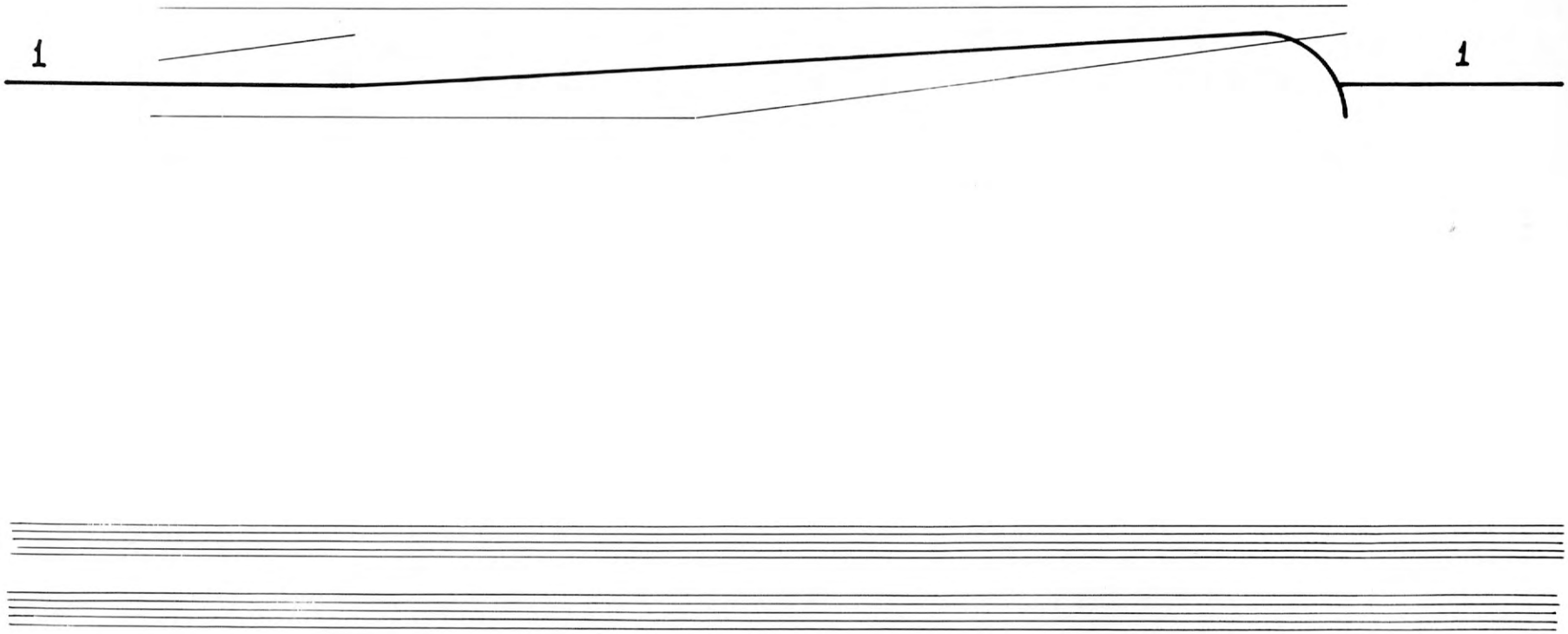
1
1

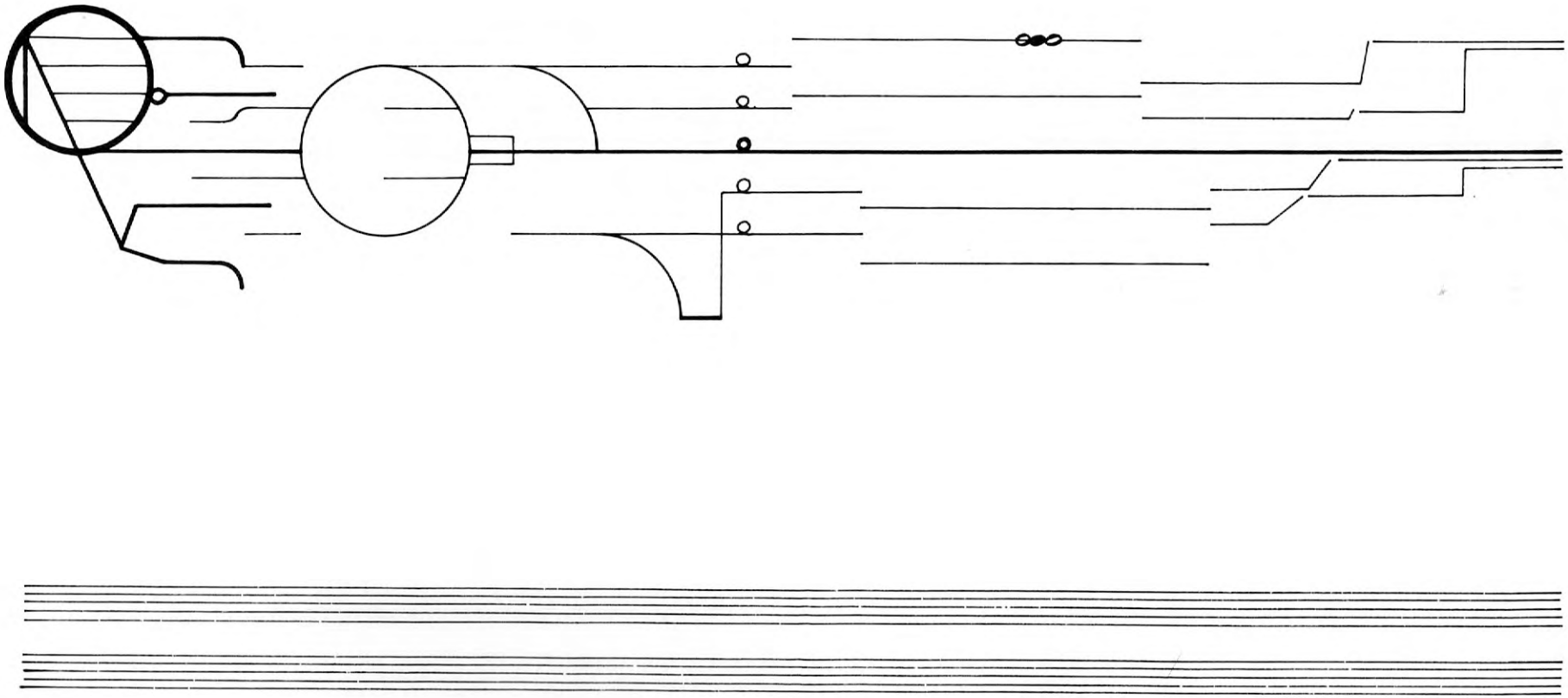

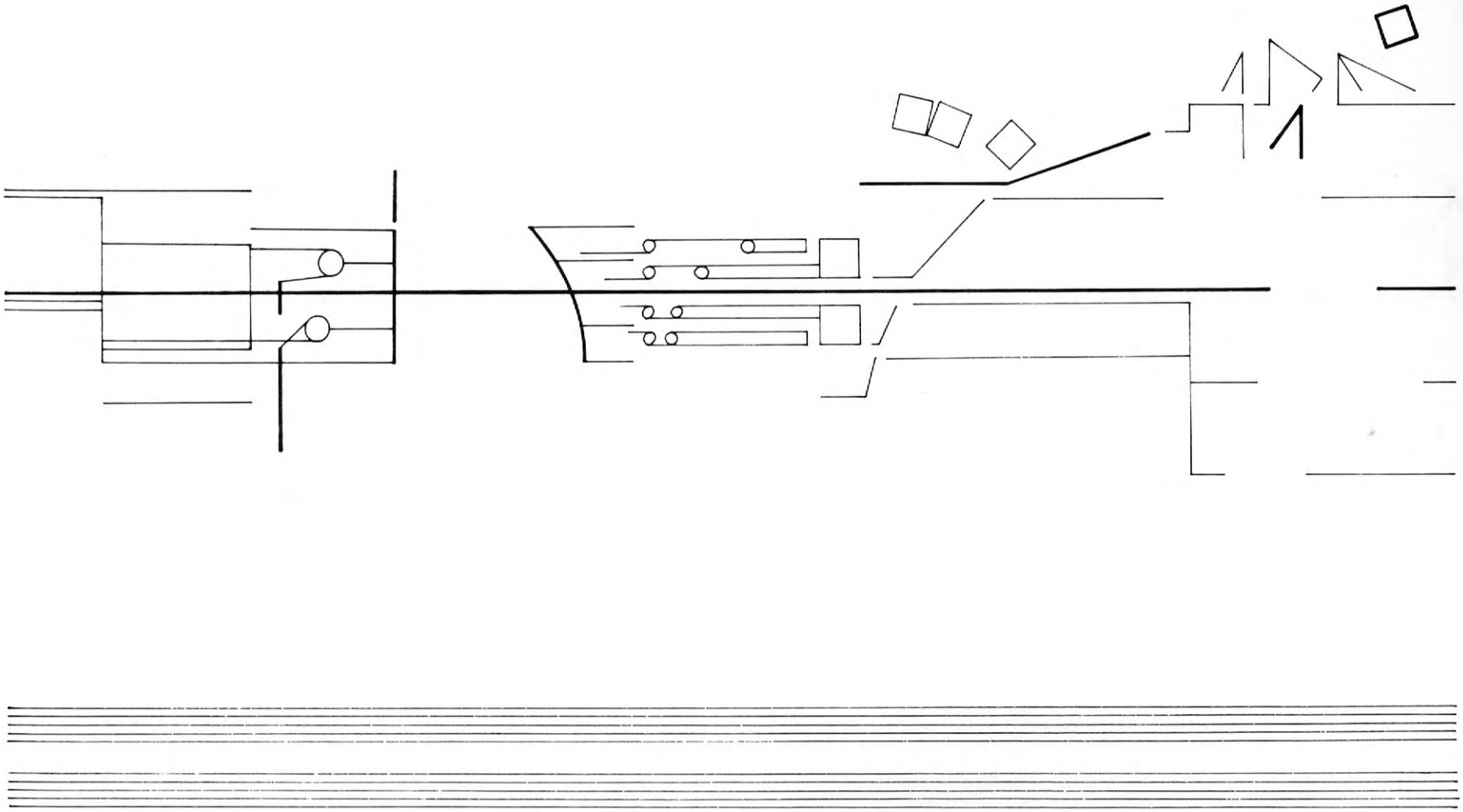

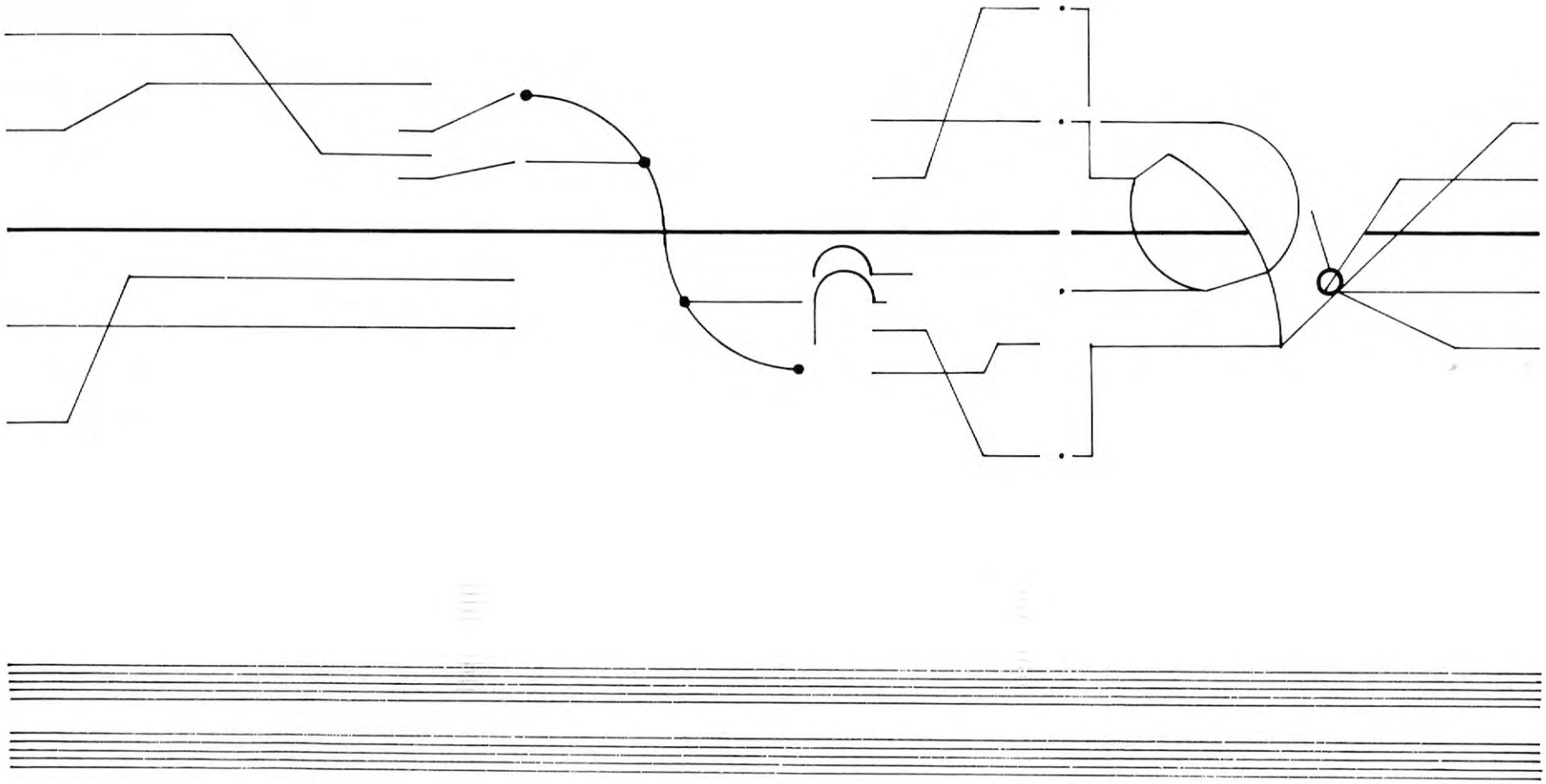

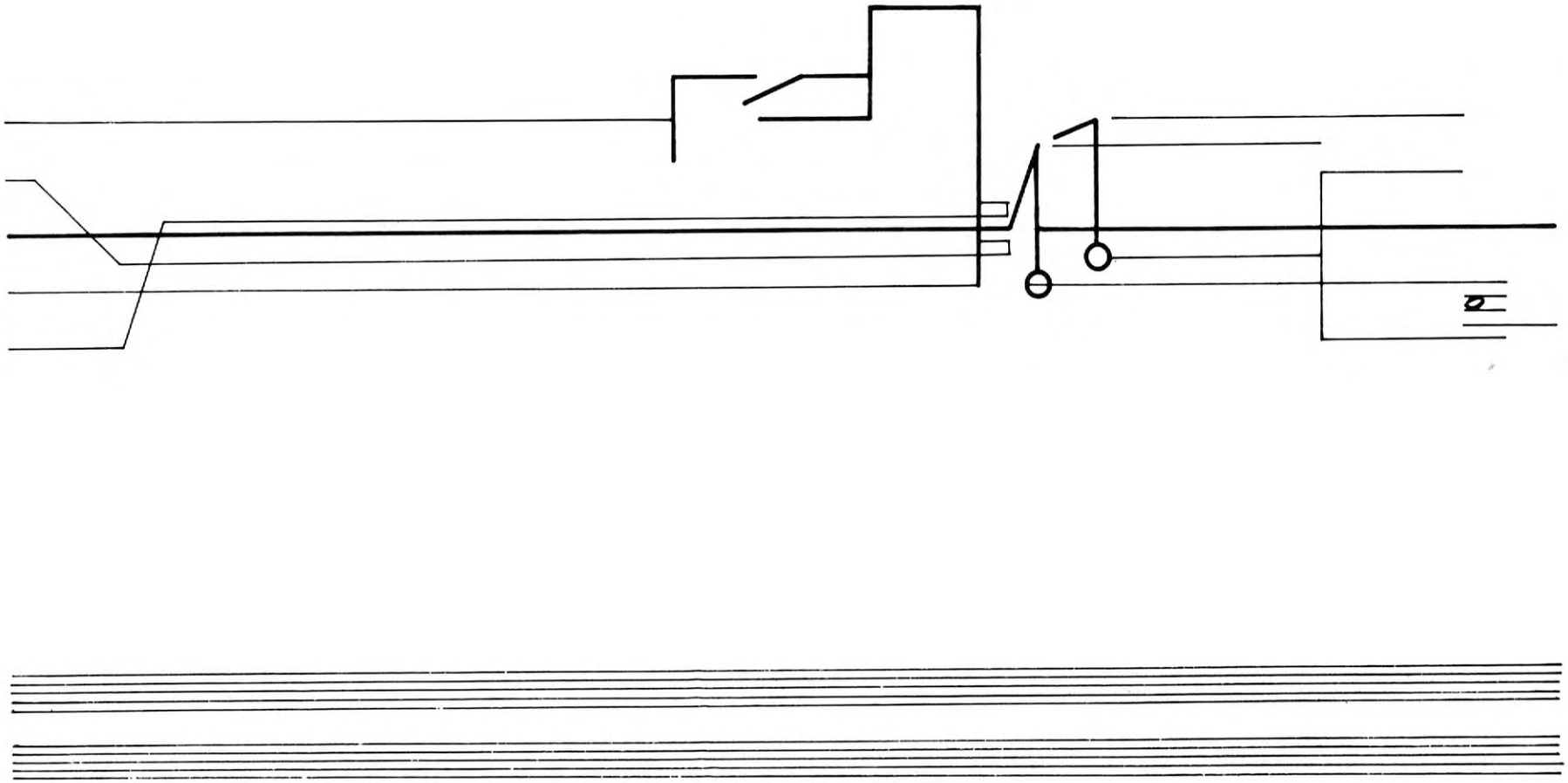

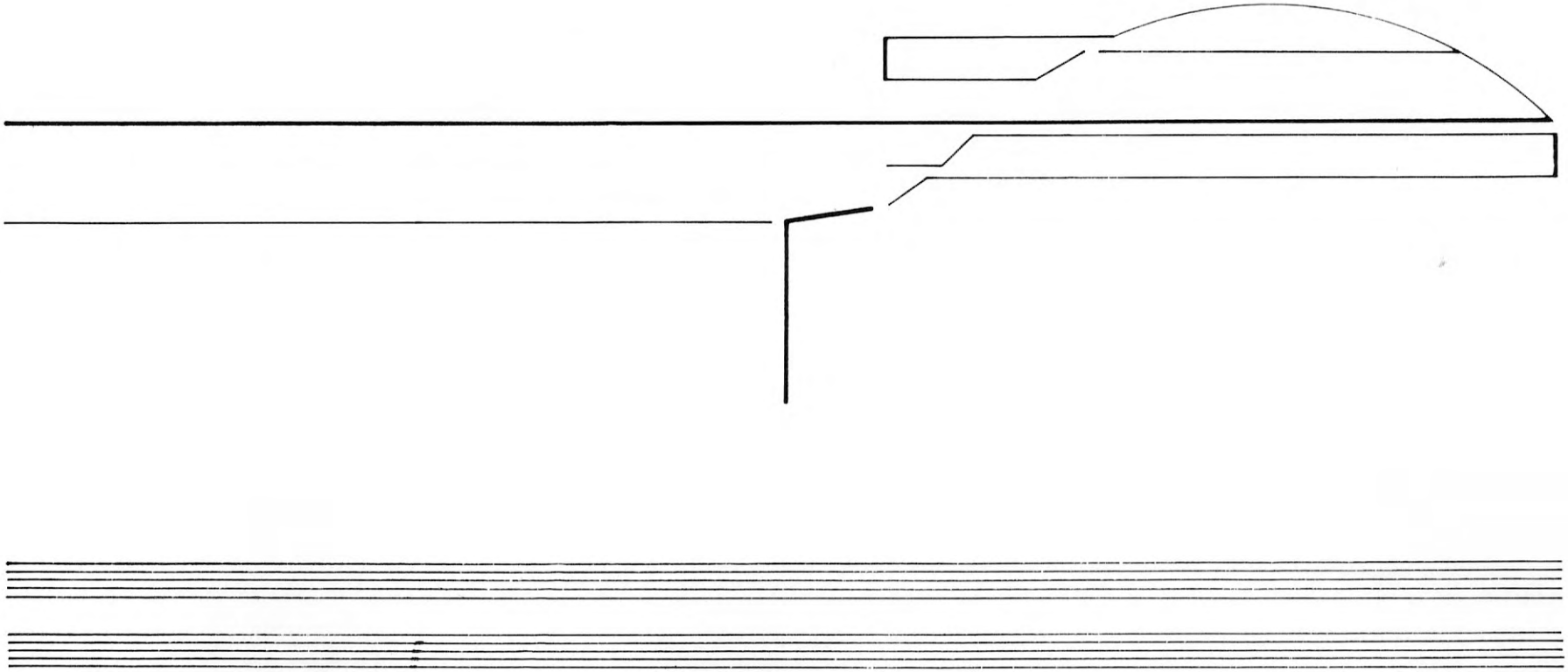

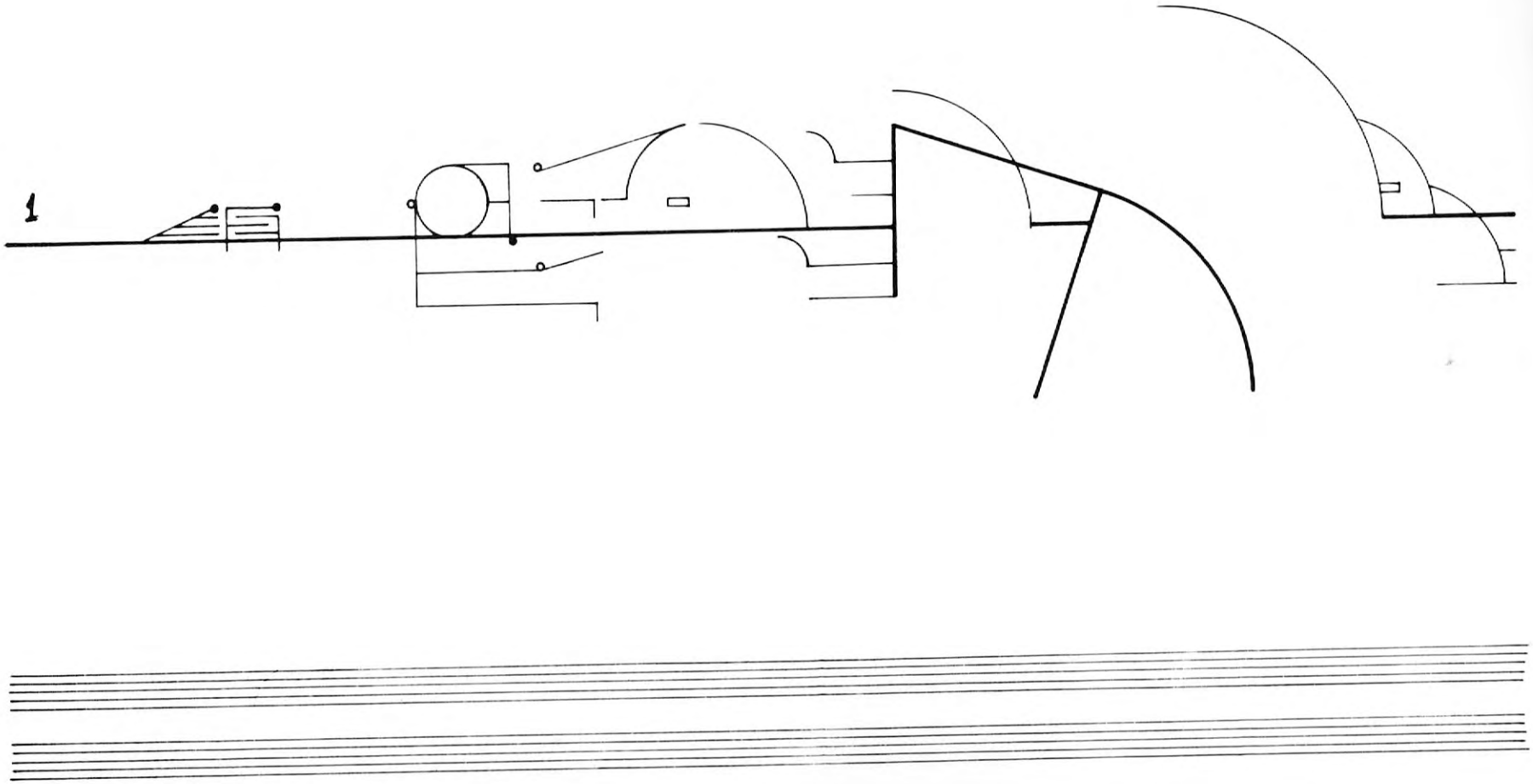
1

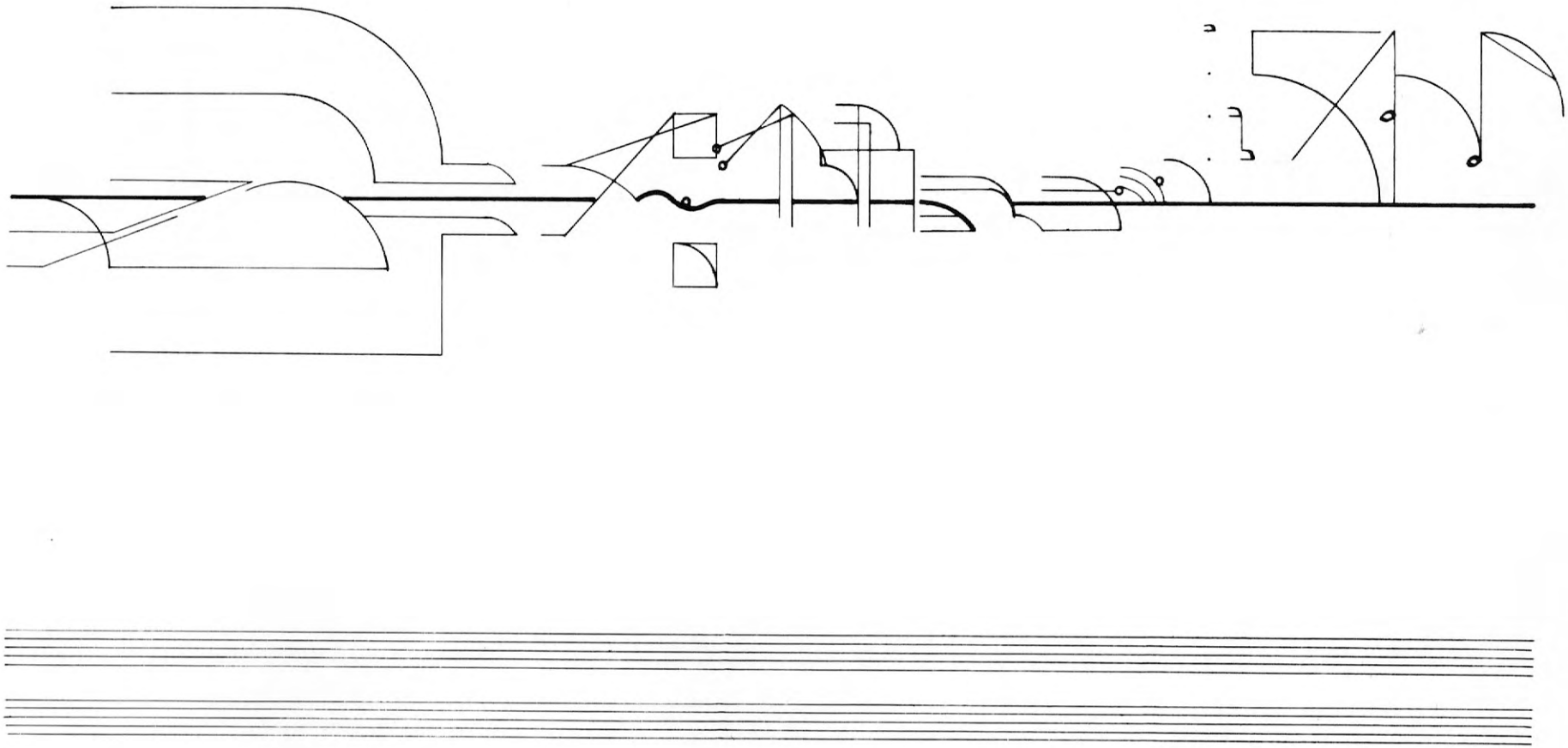

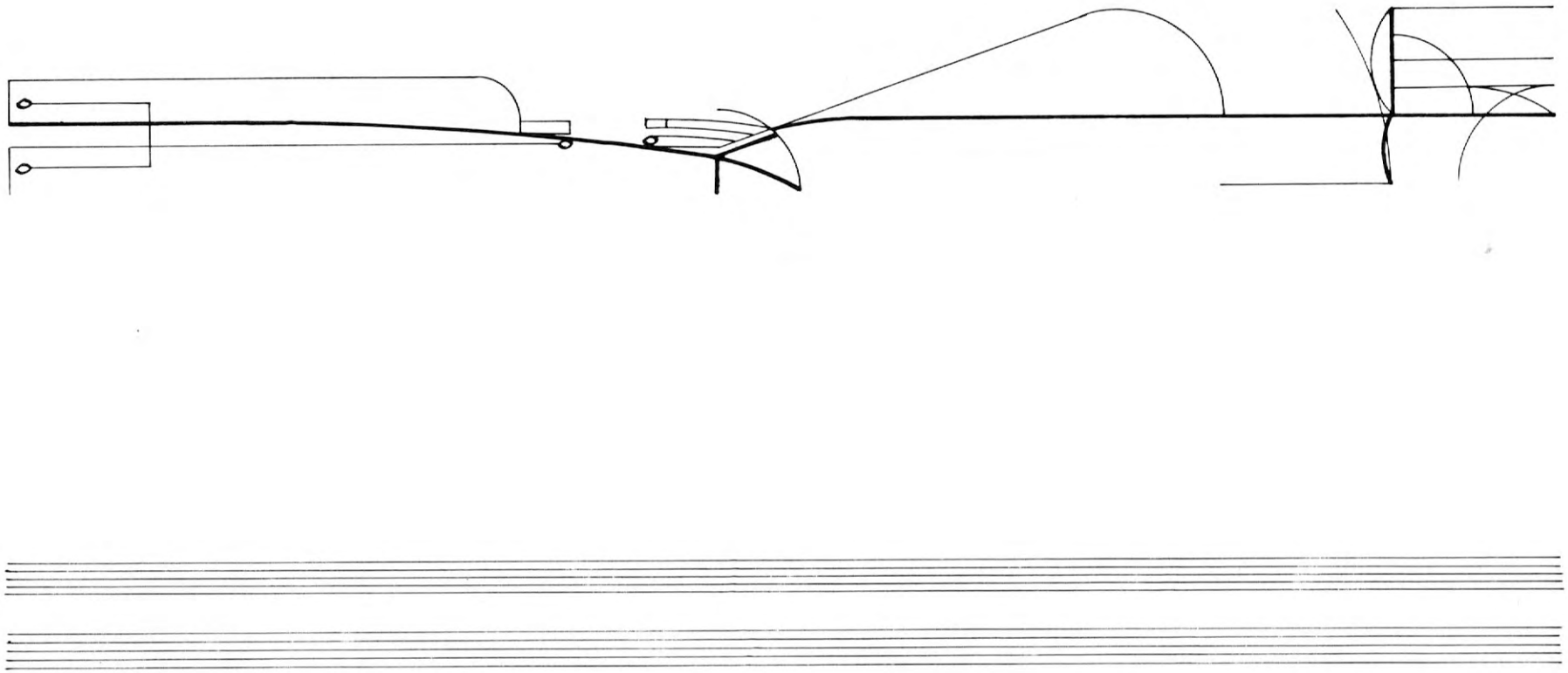

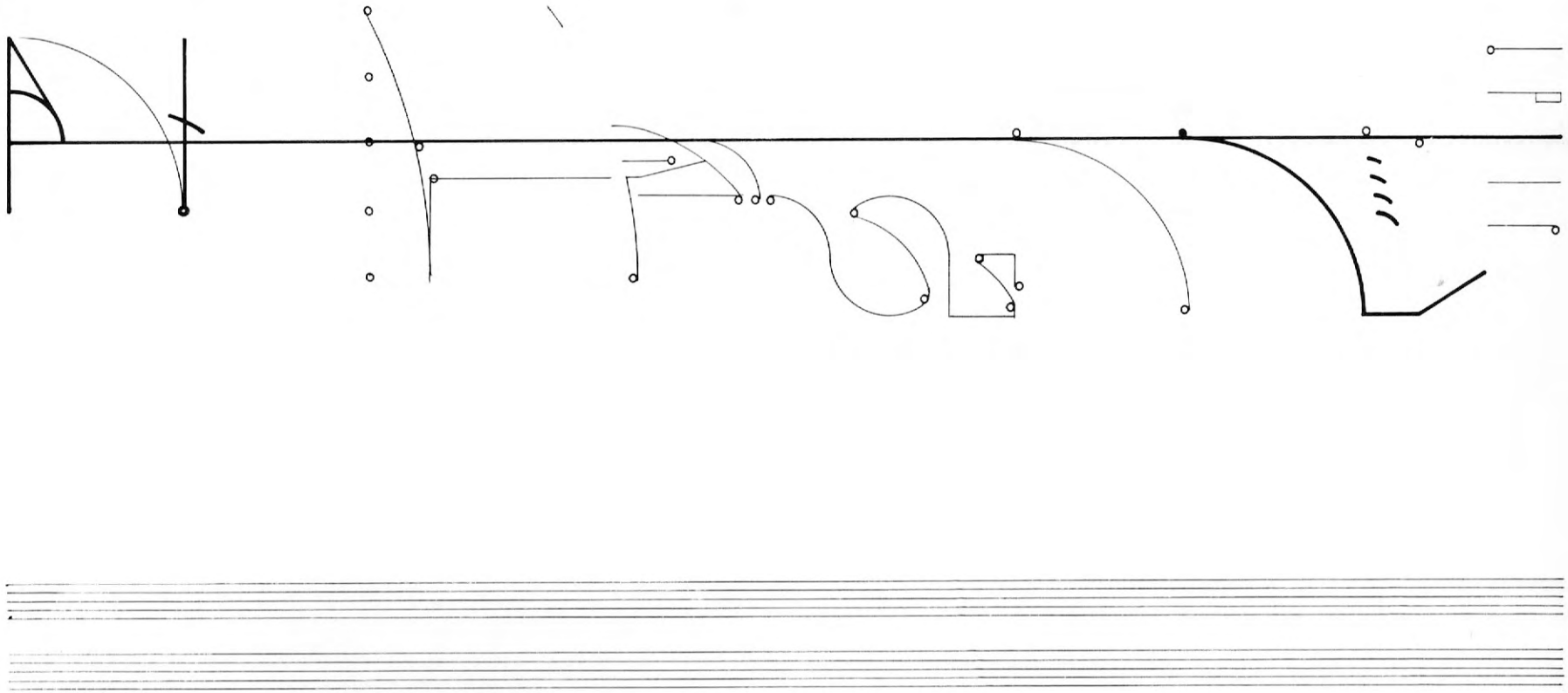

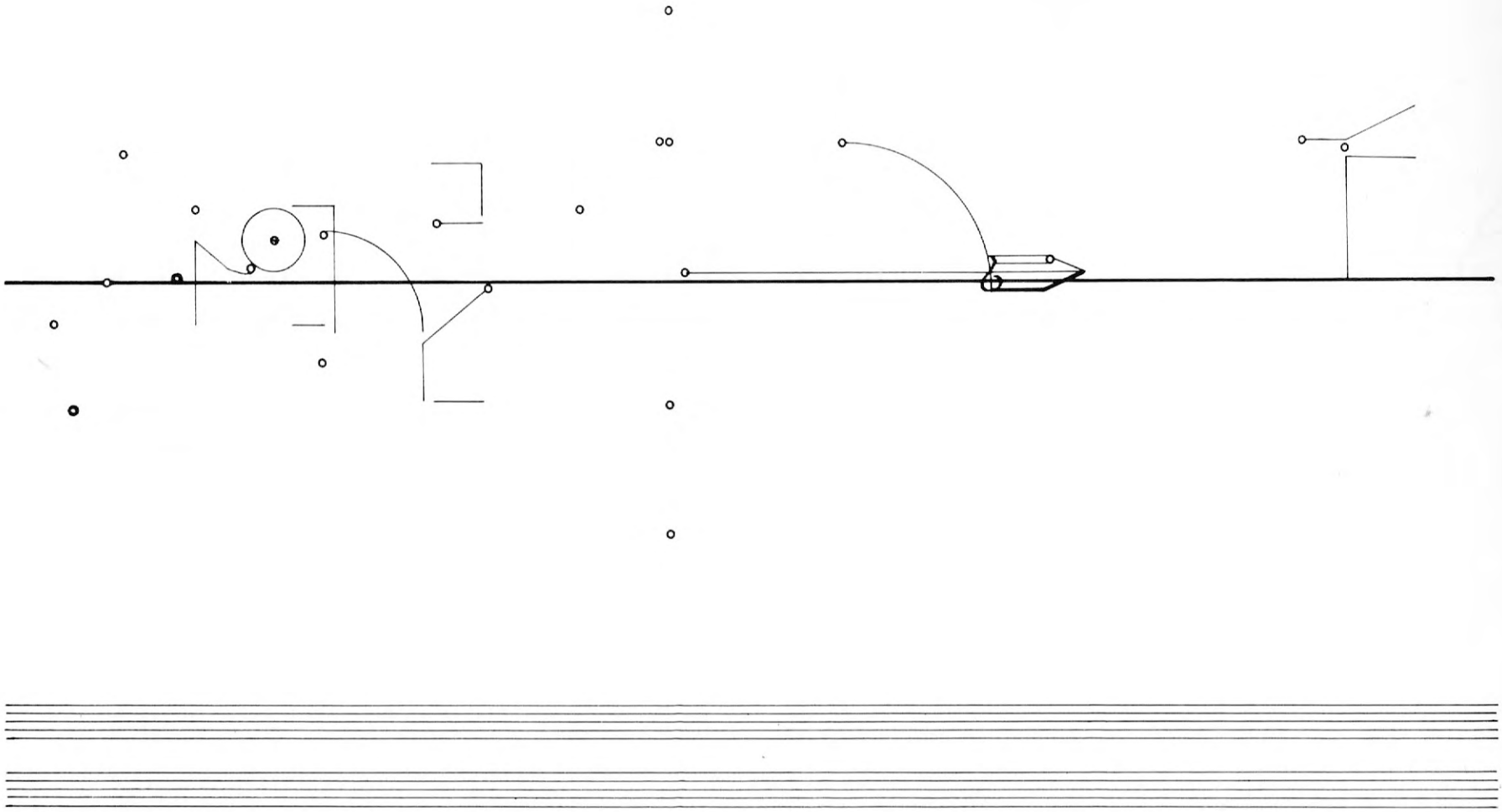

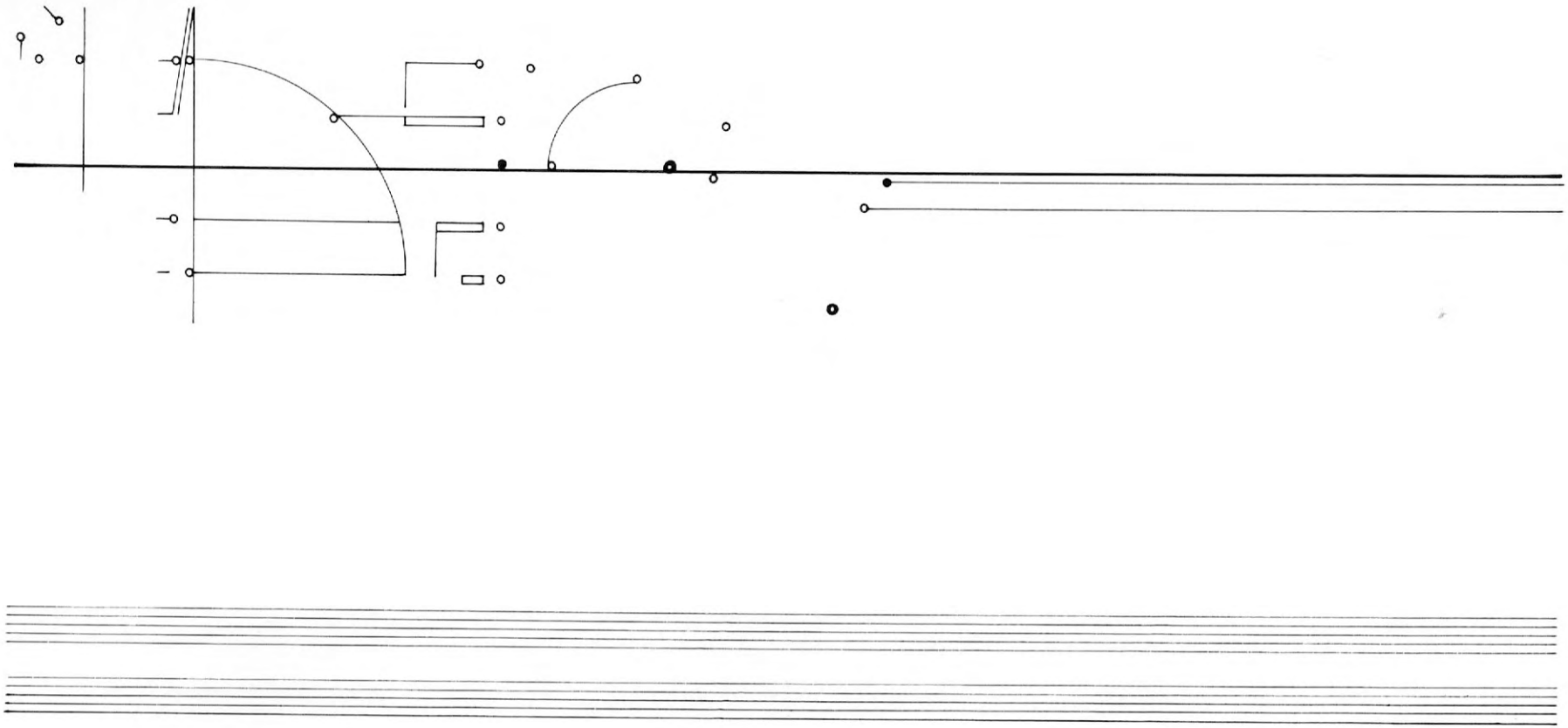

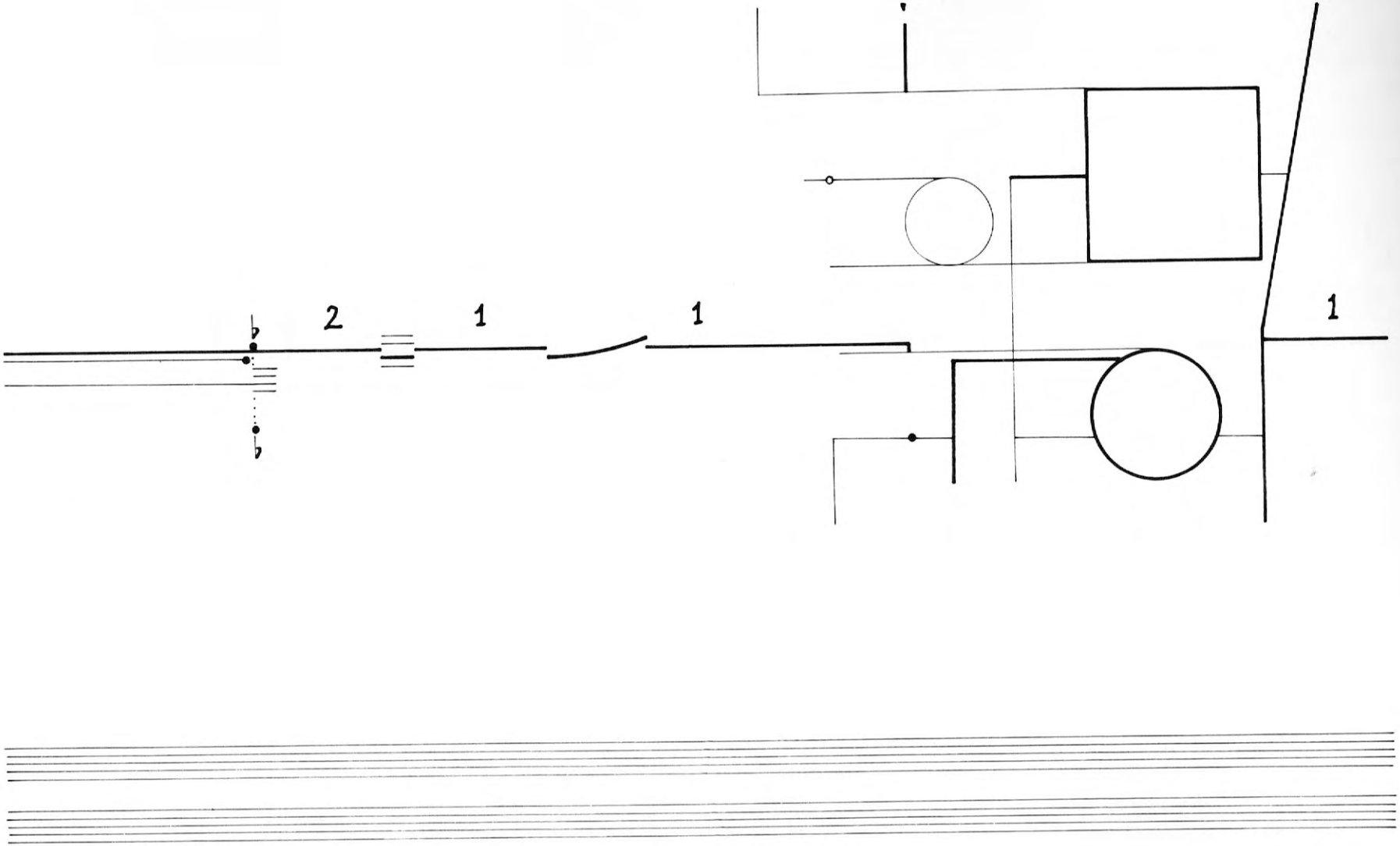
2
1
1
1

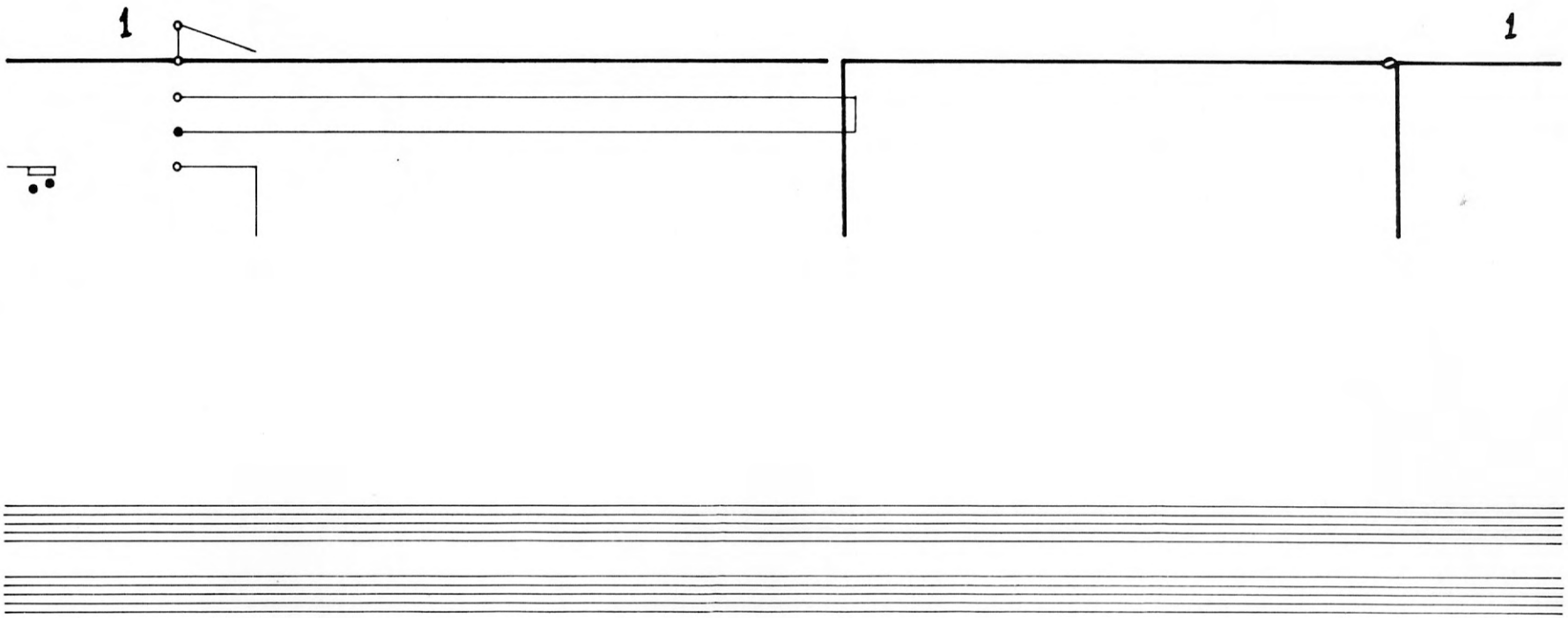
1
1

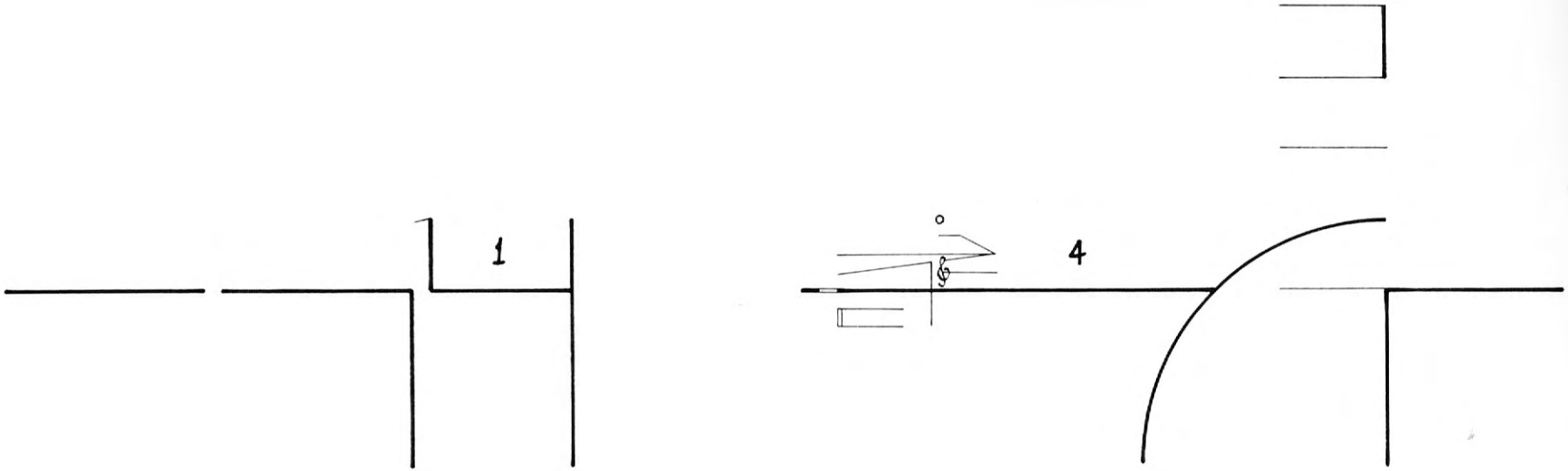
1
4

4

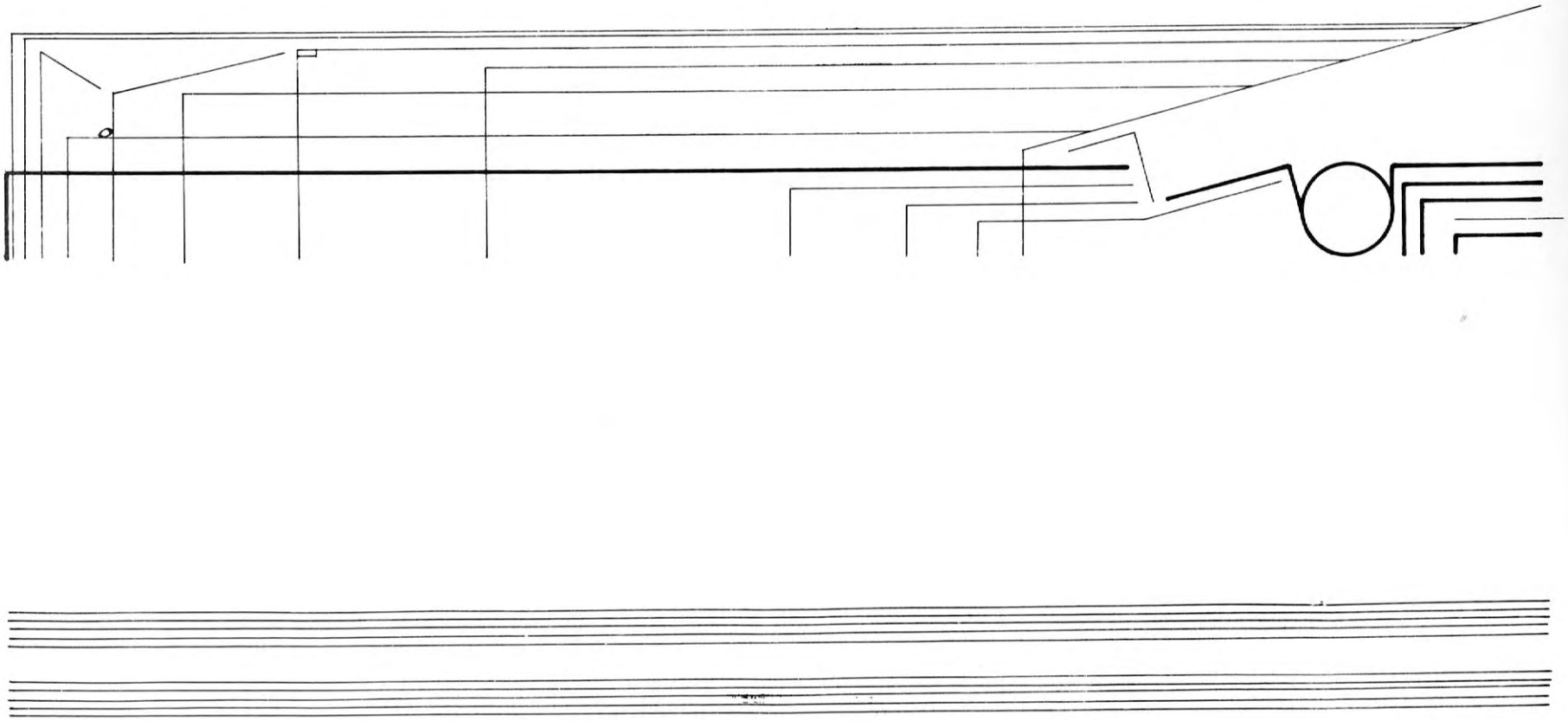

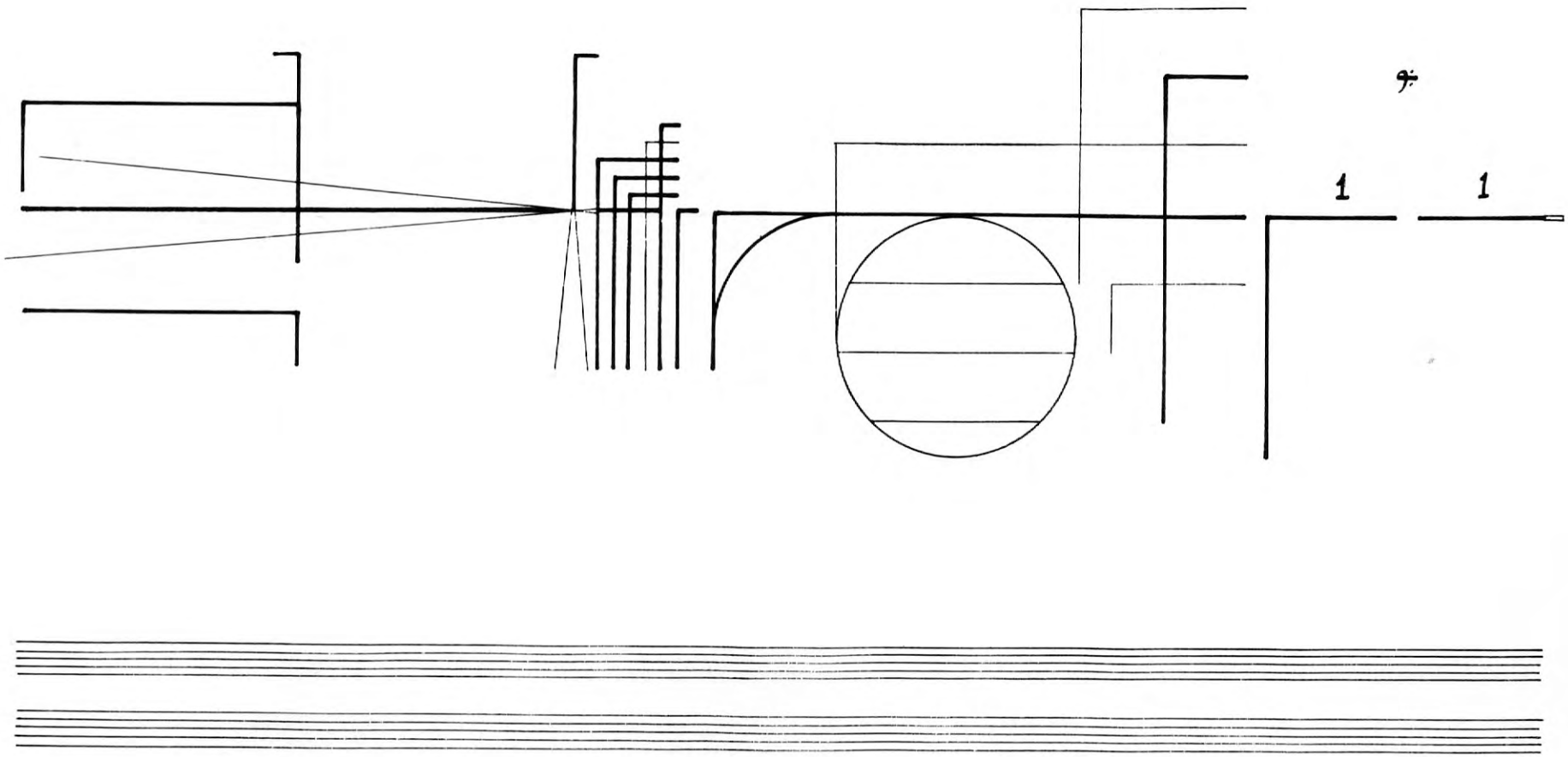
9
1
1

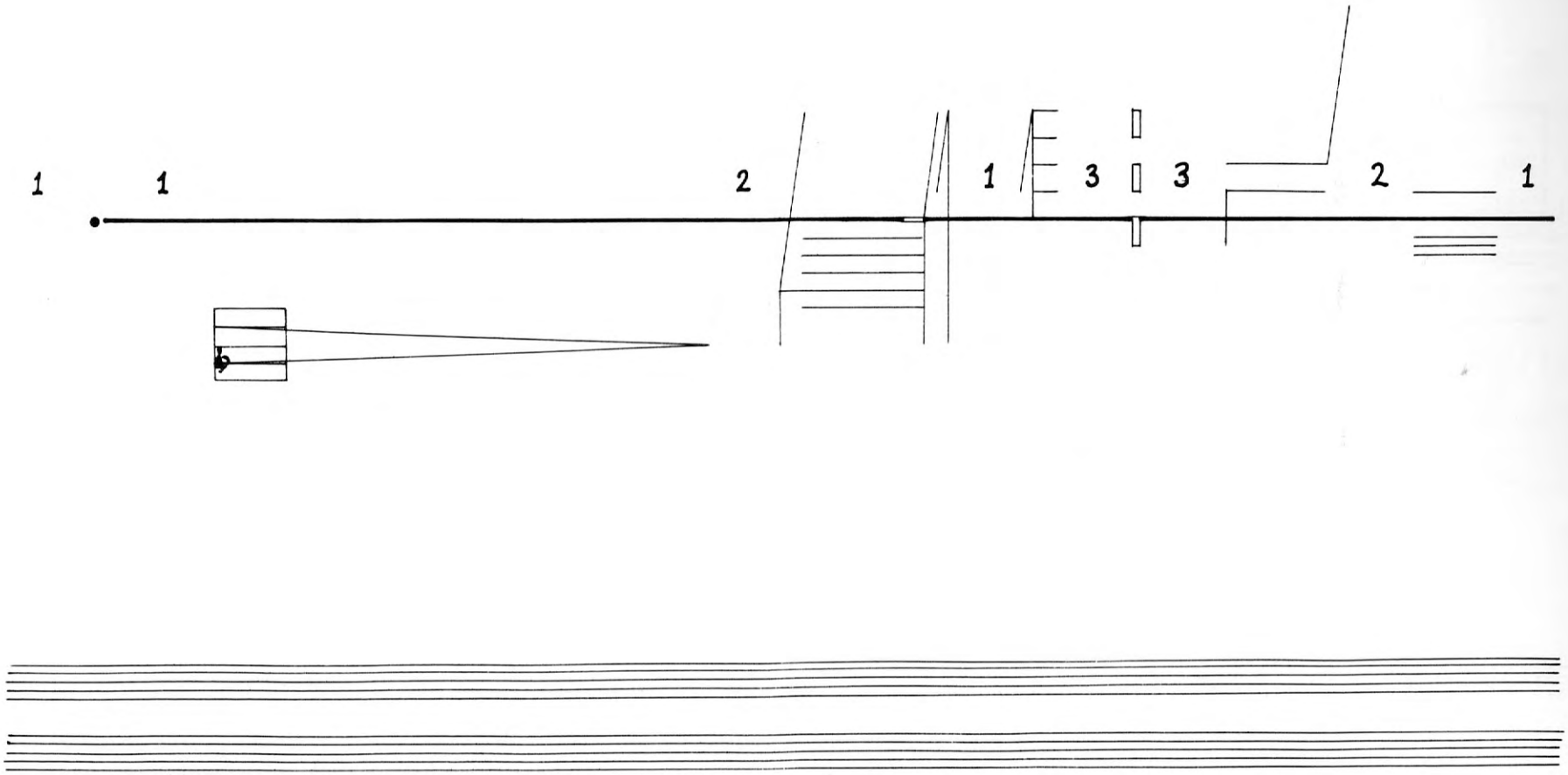
1
1
2
1
3
3
2
1

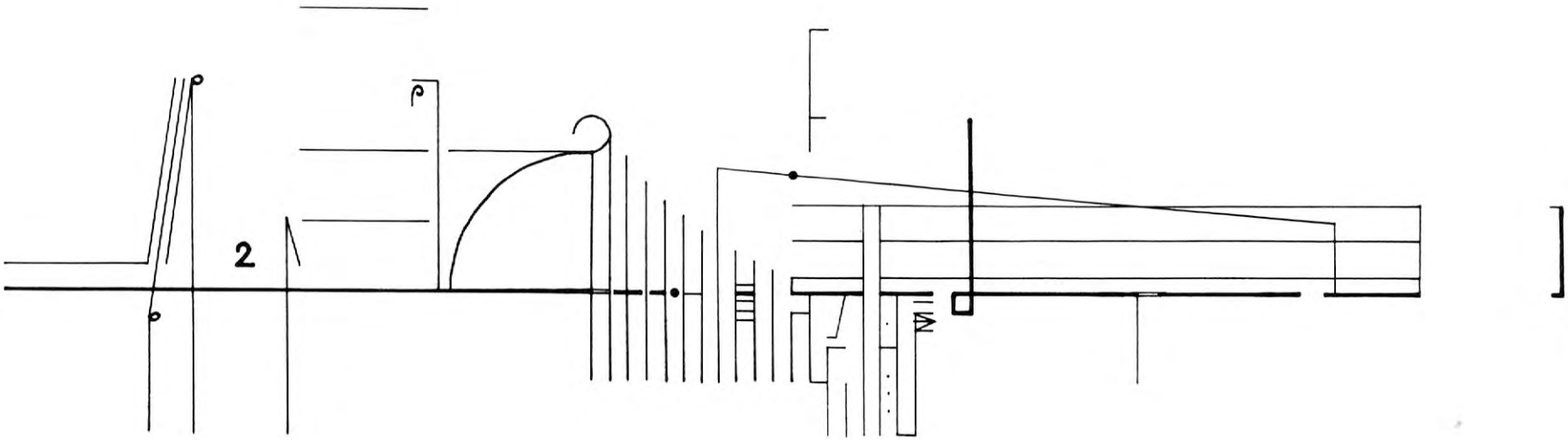
2

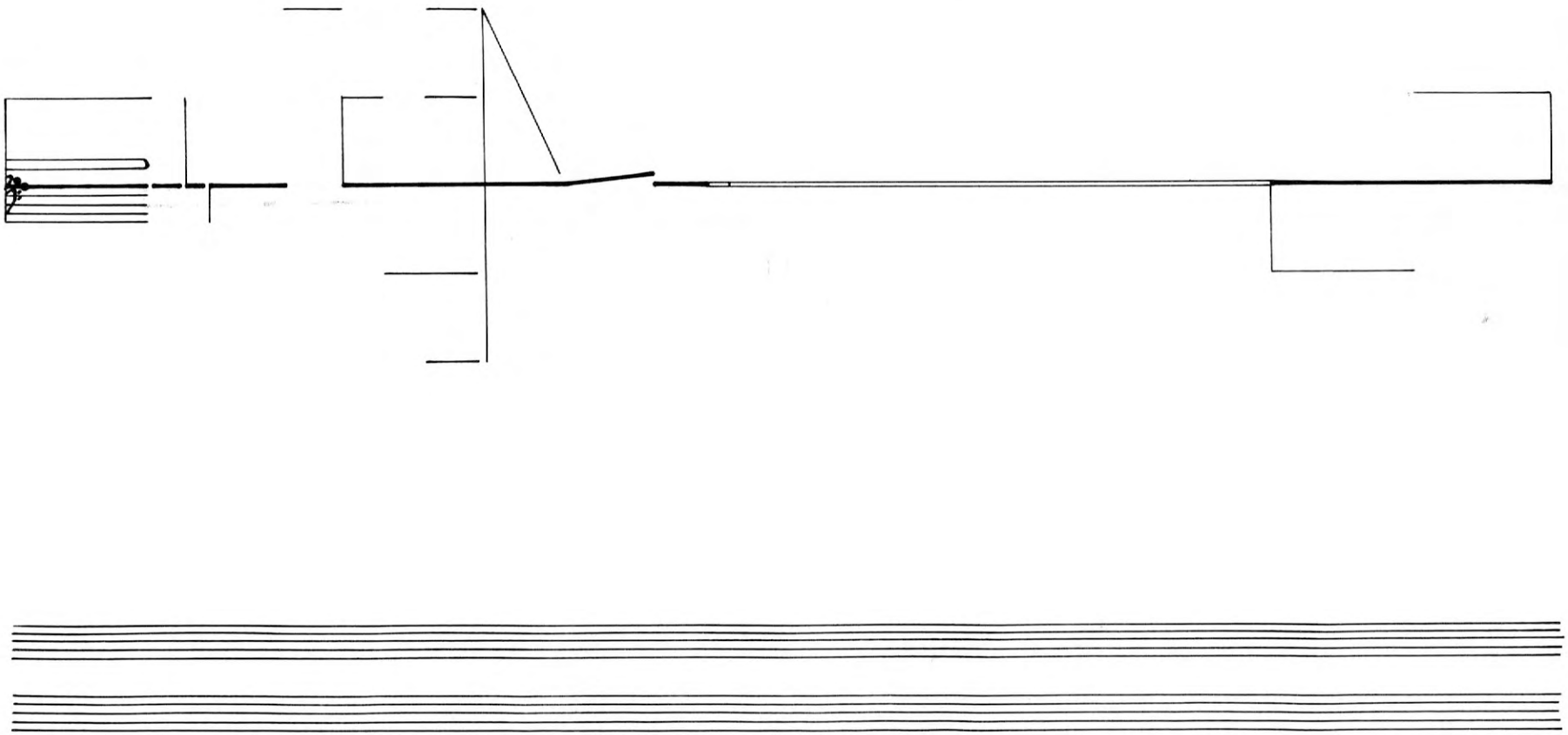

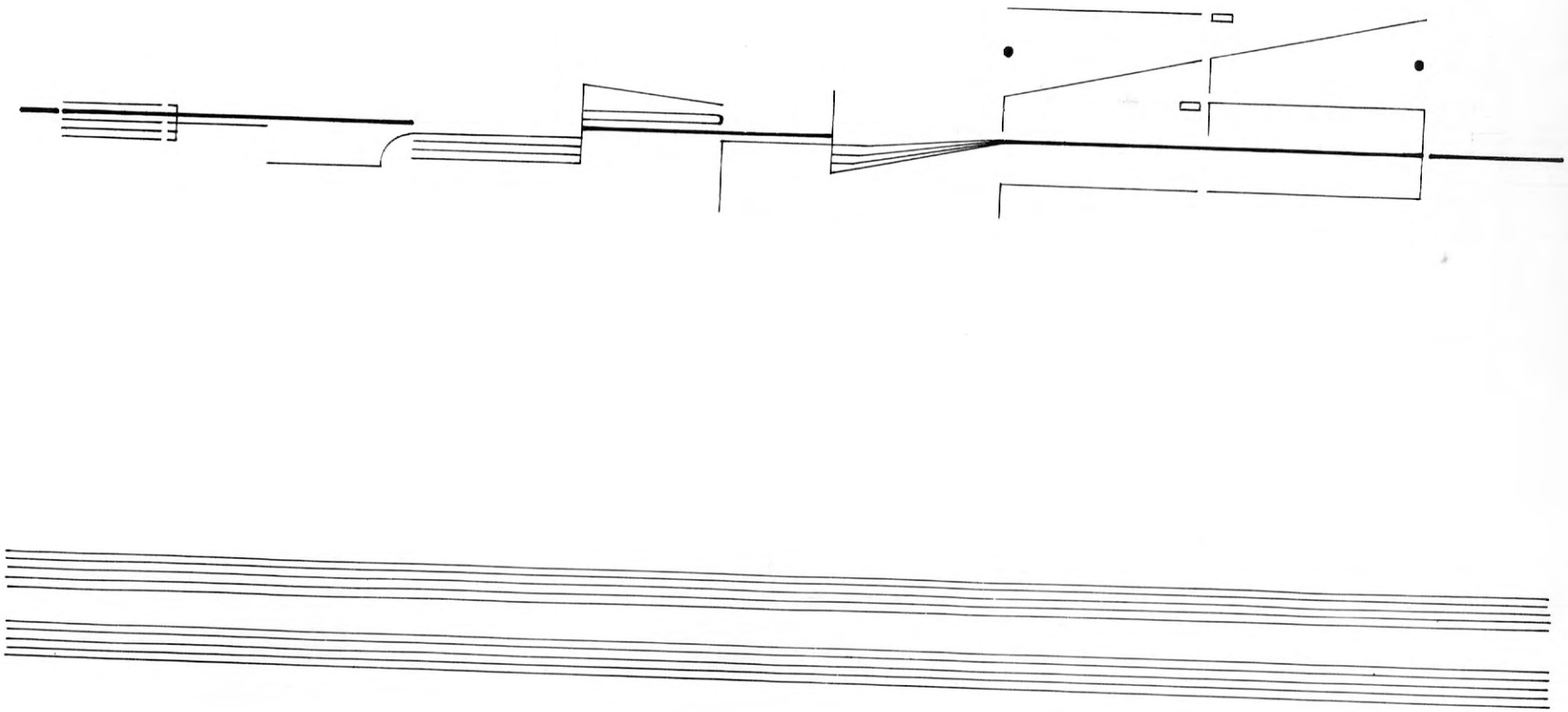

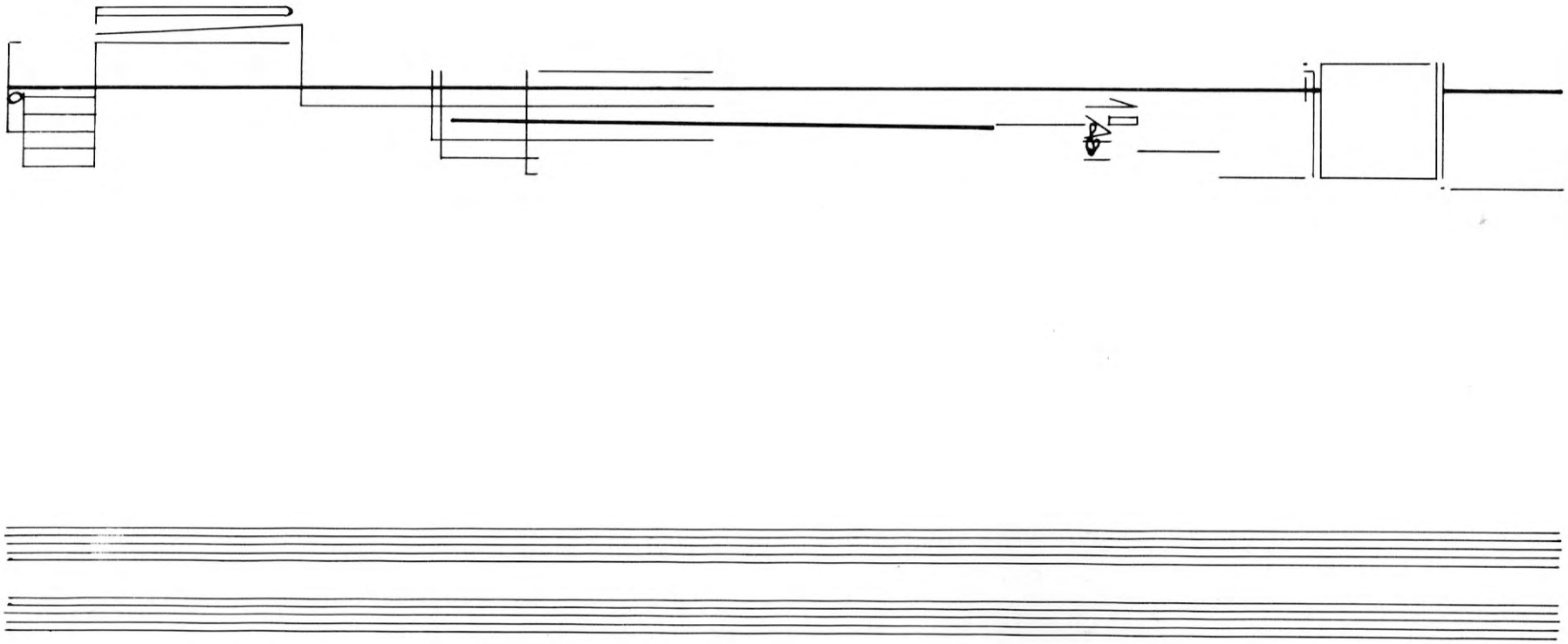

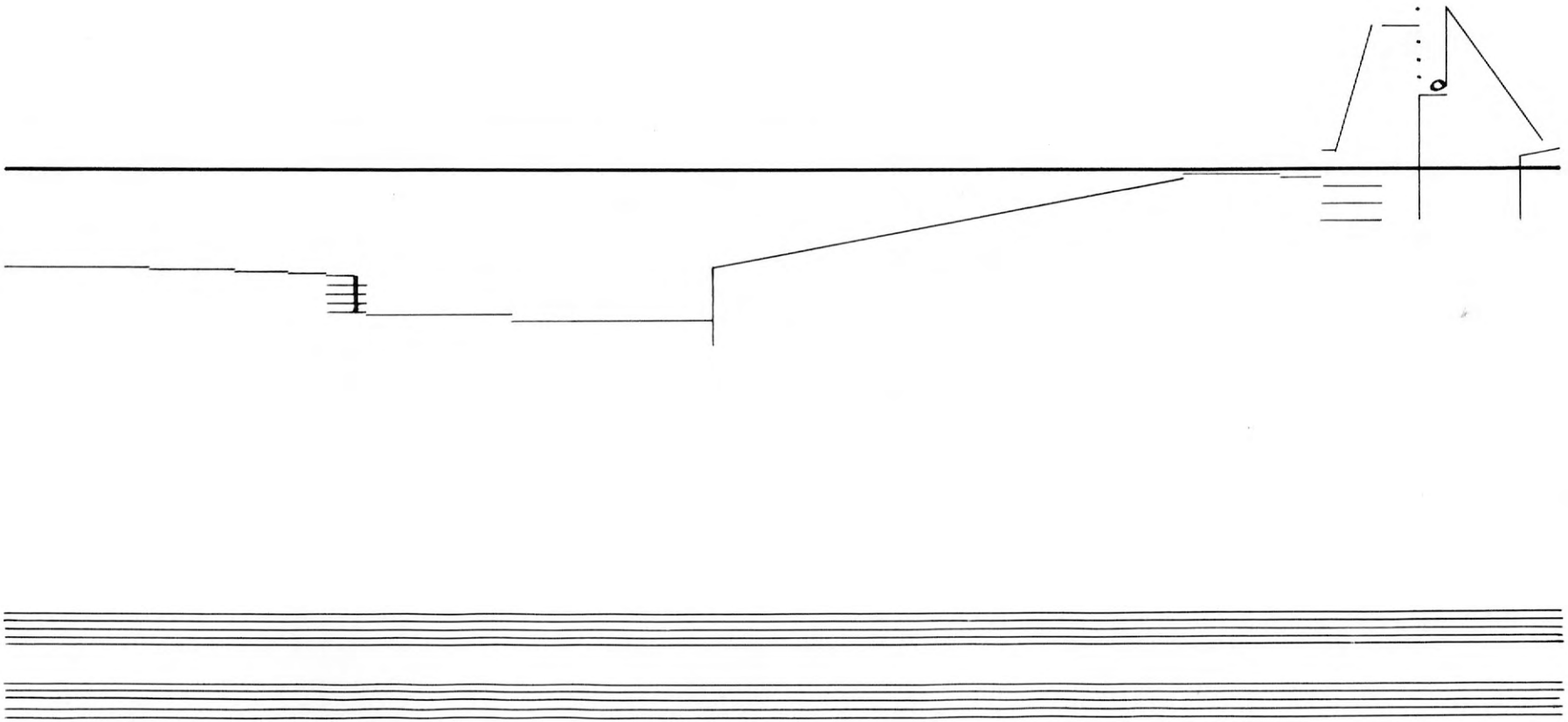

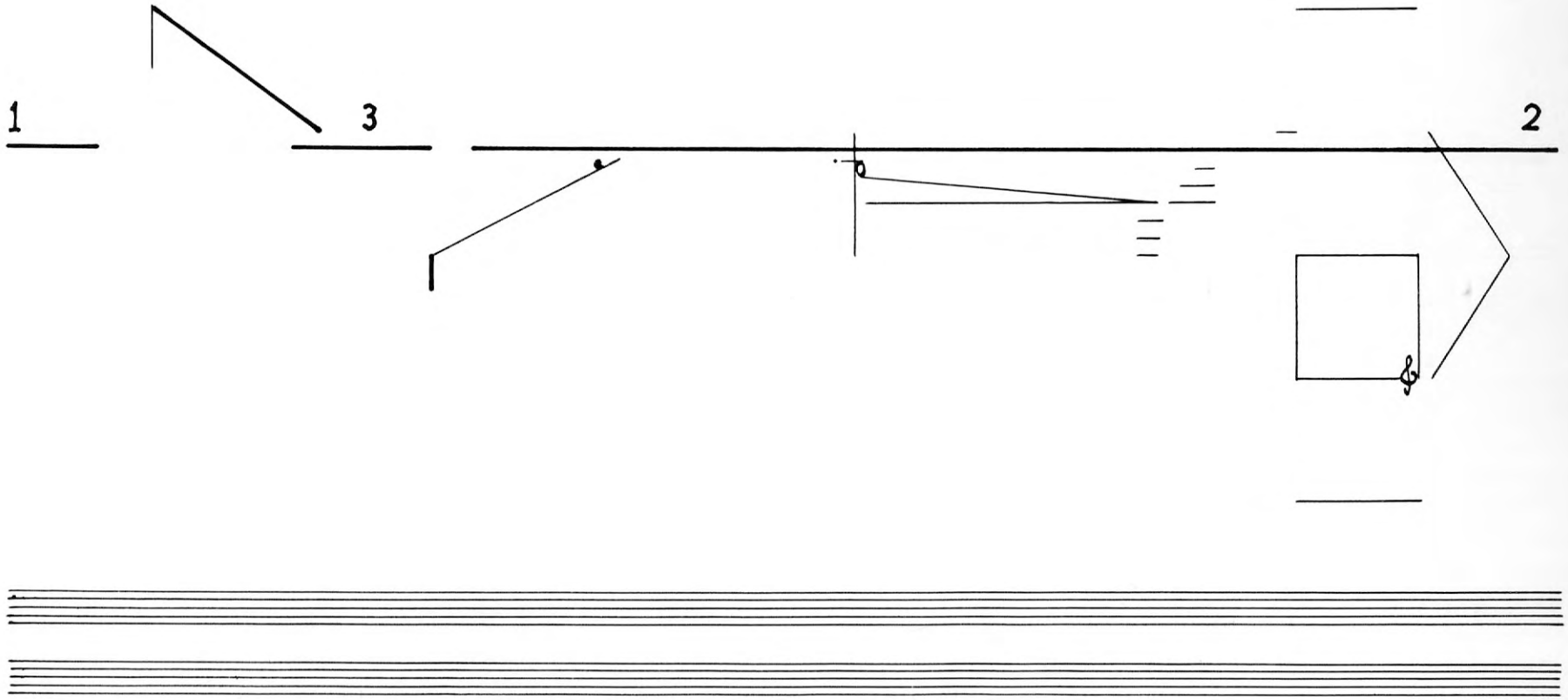
1
3
2

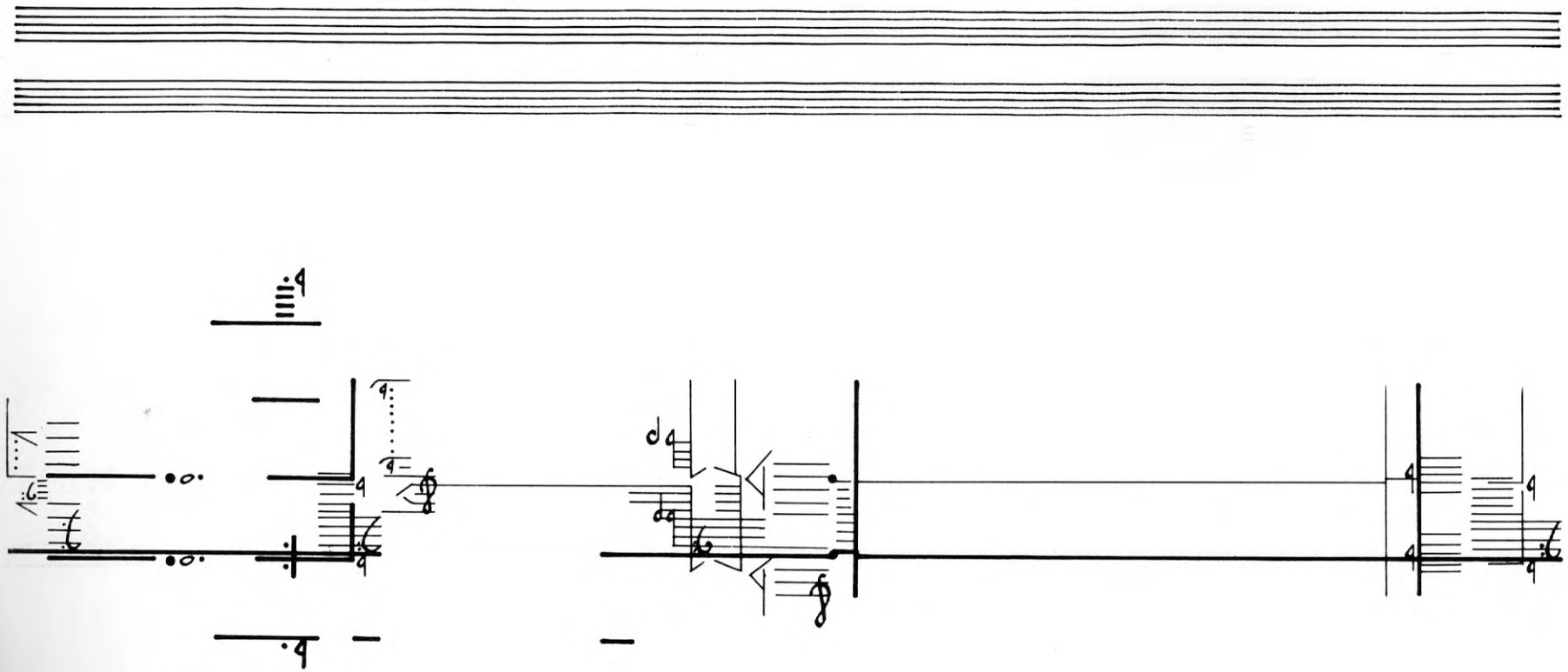

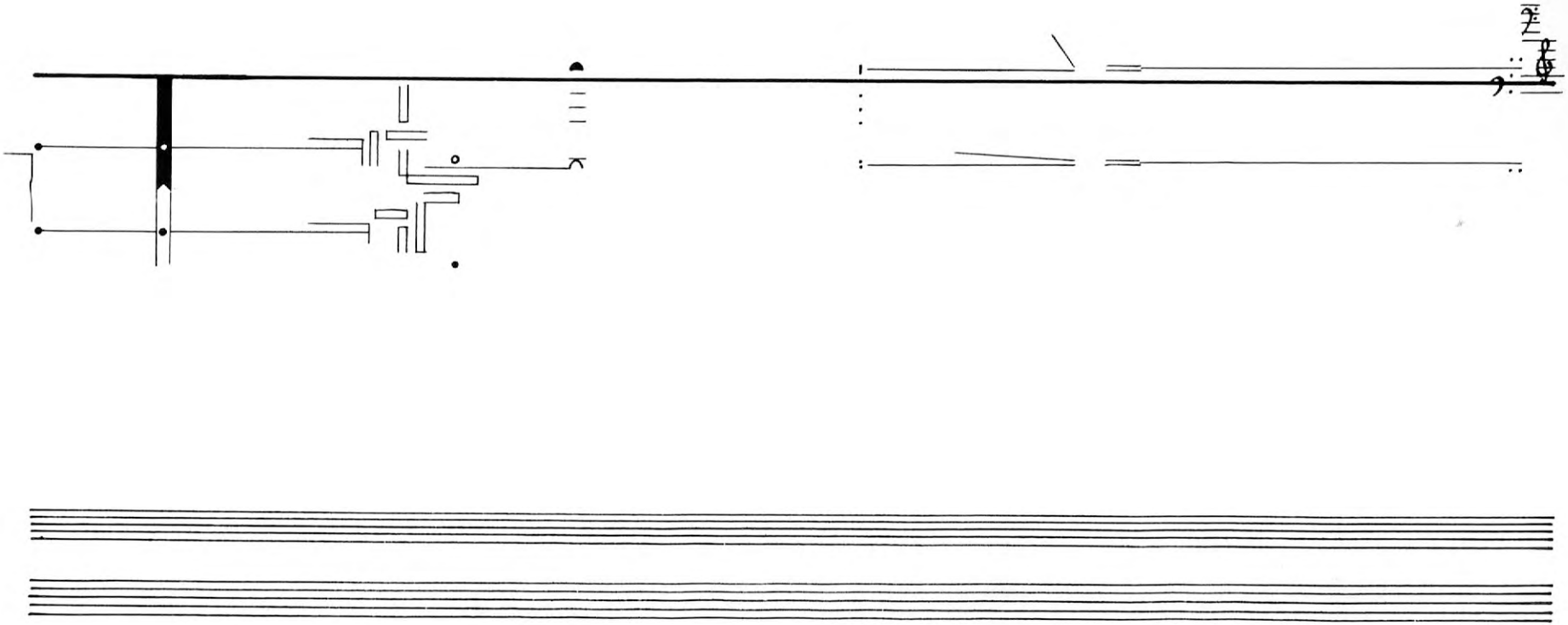

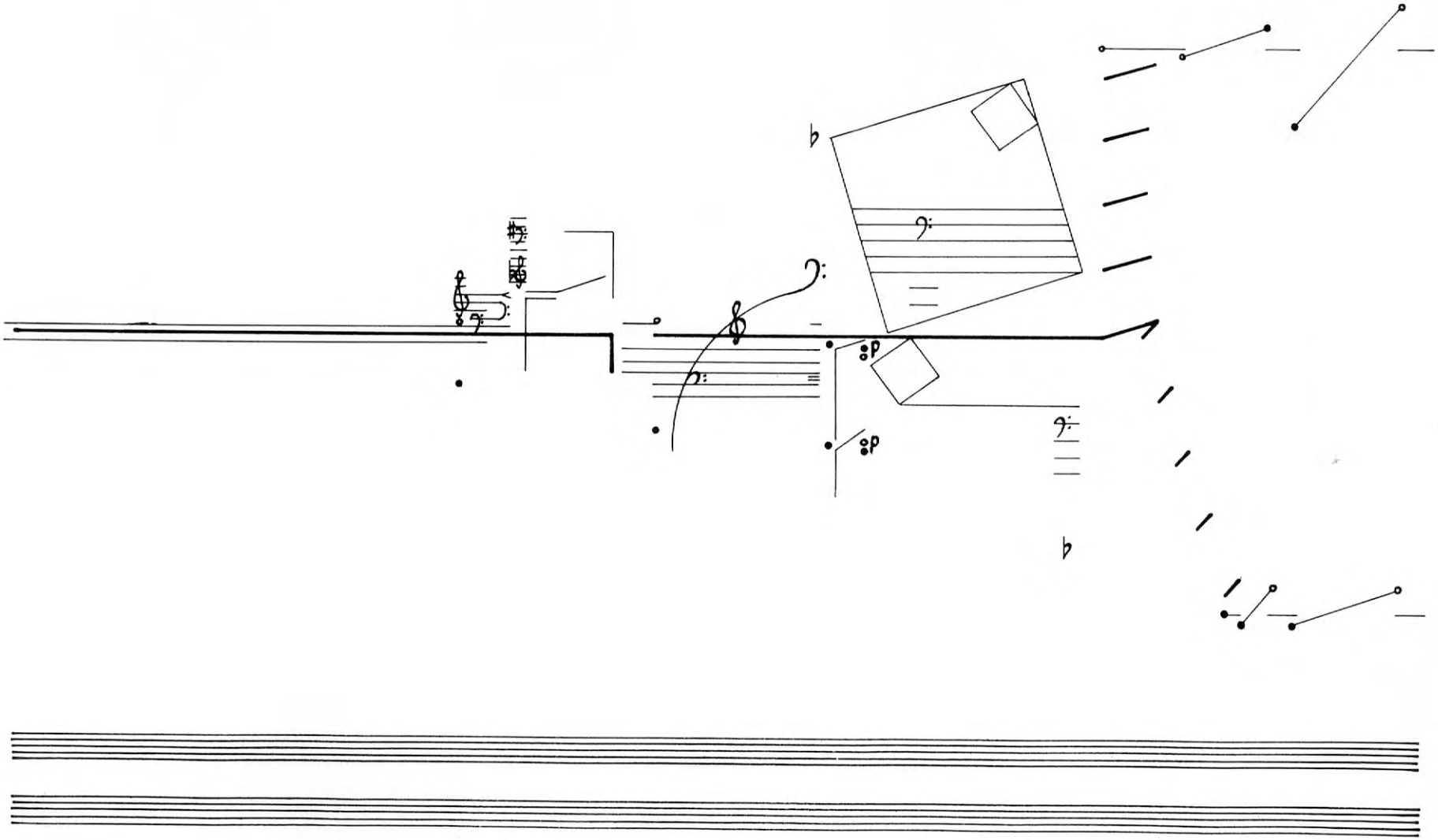

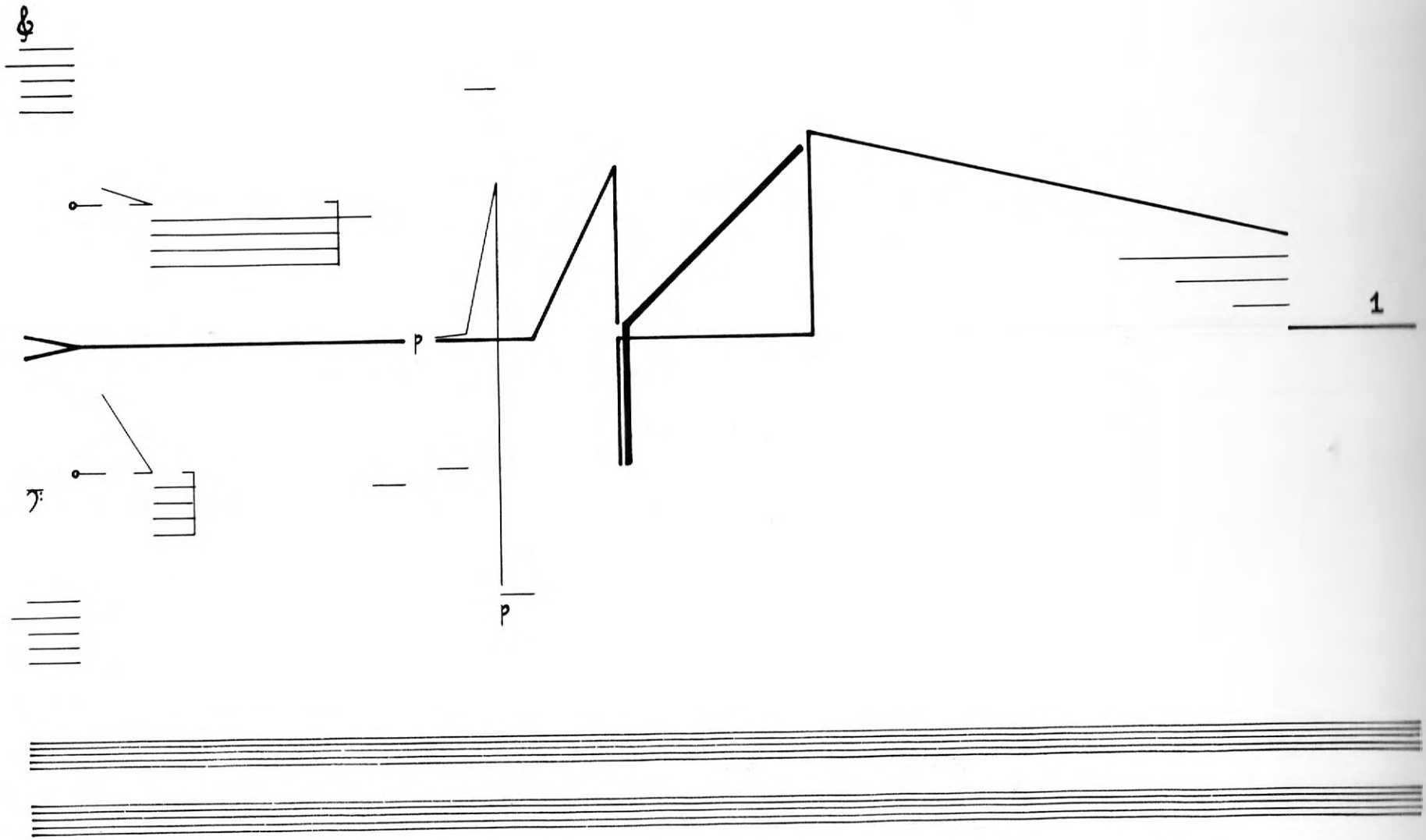
p
p
1

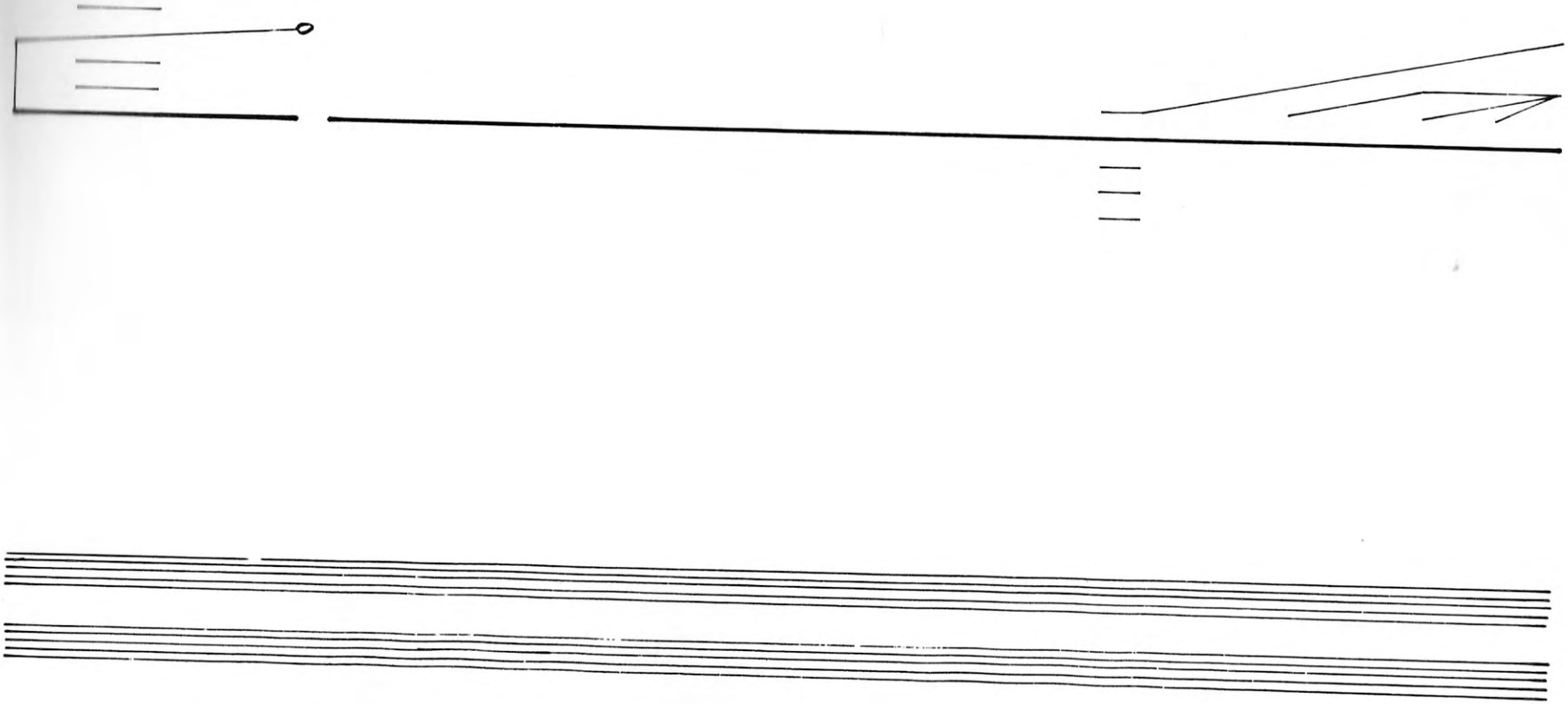

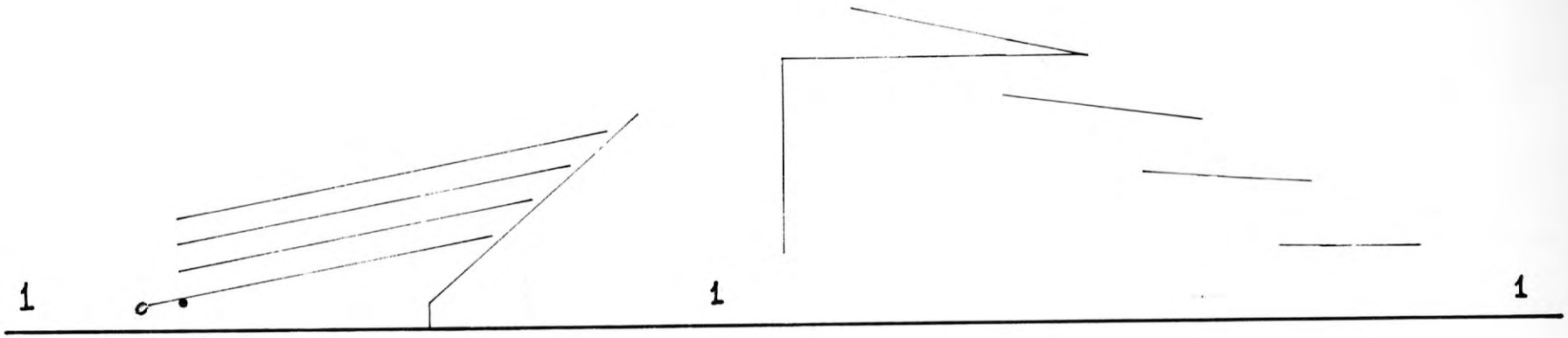
1
1
1

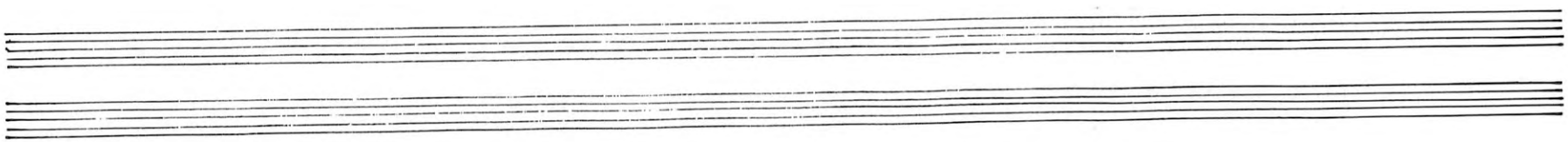

2

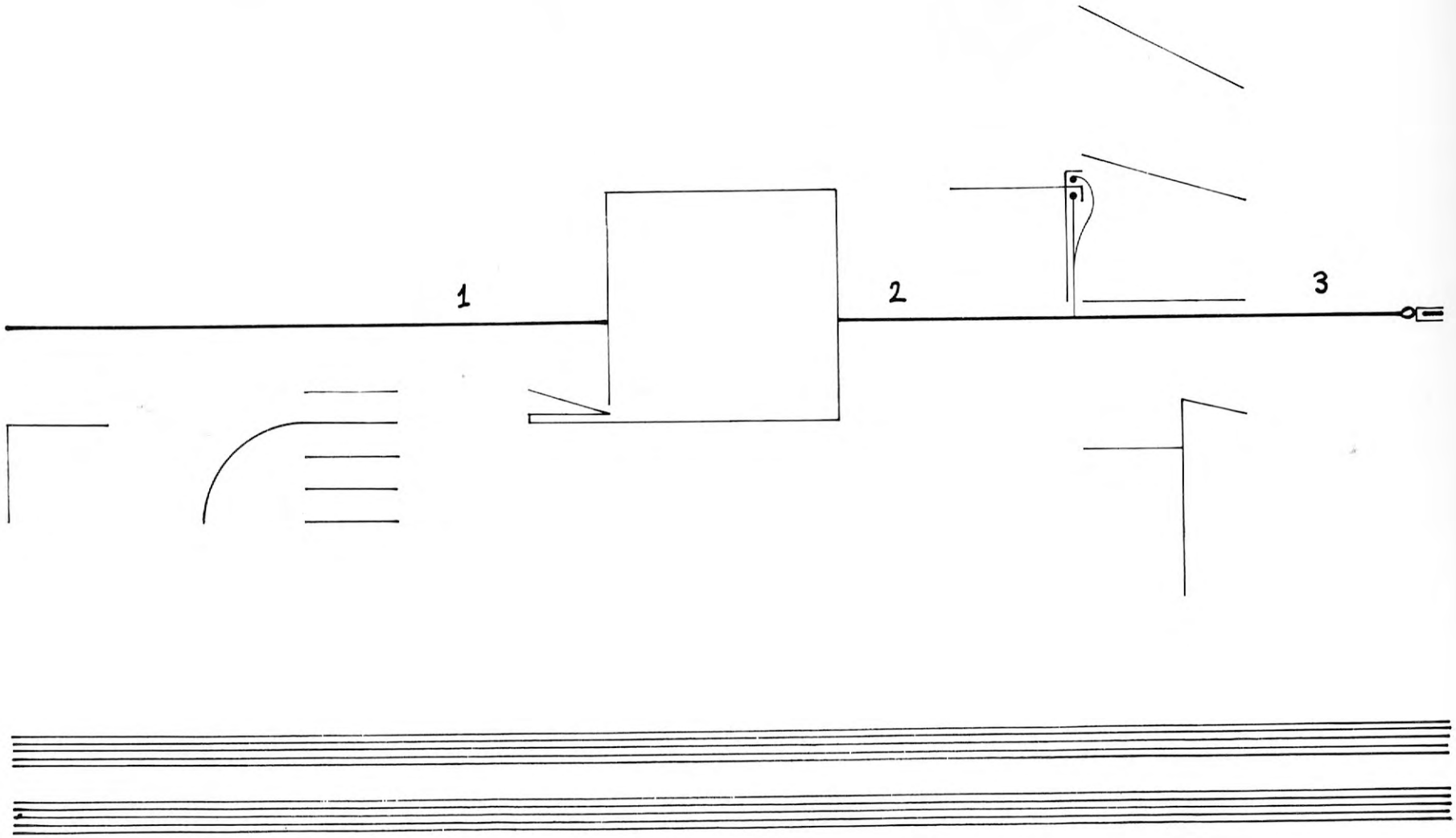
1
2
3

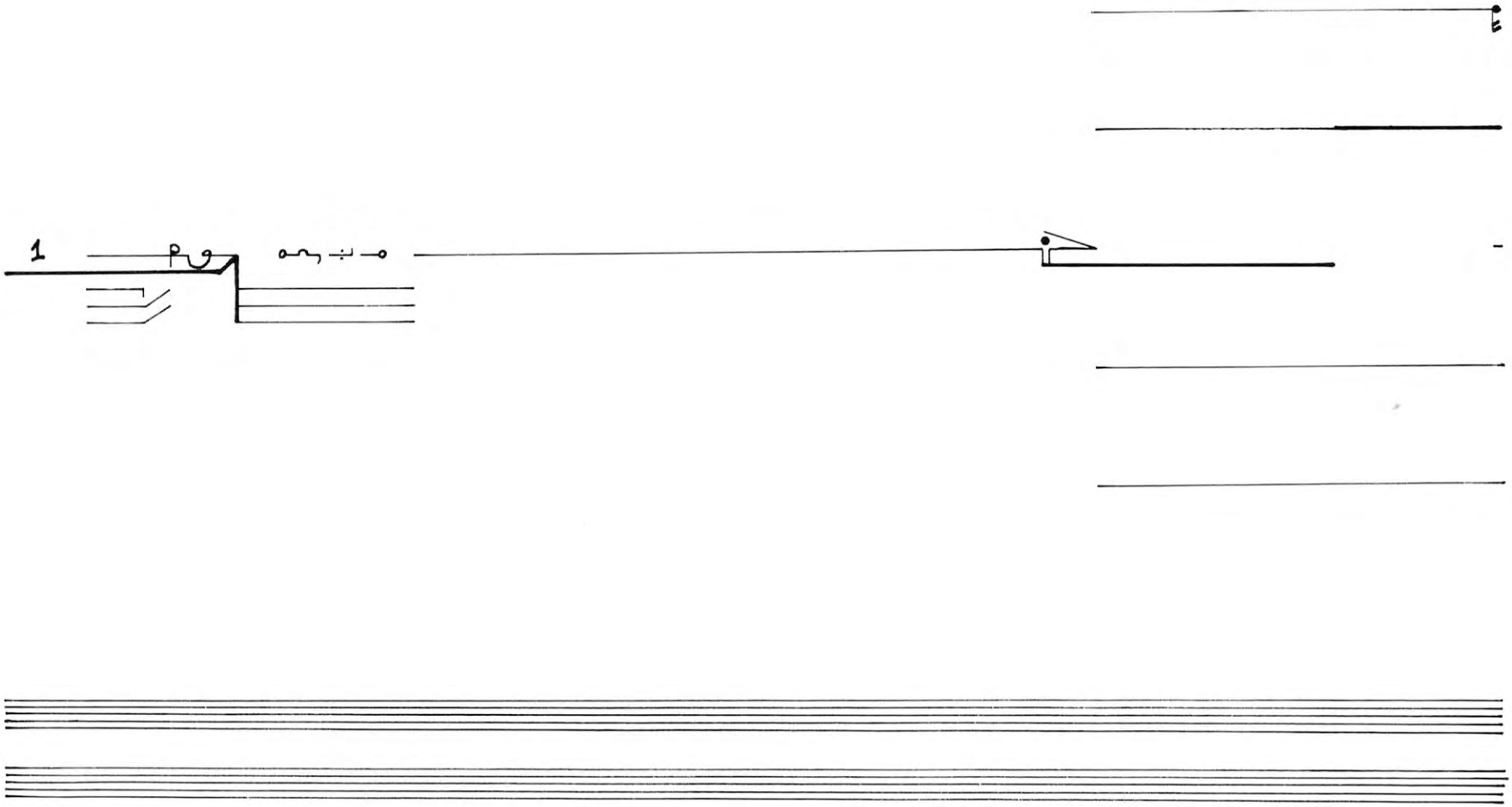
1

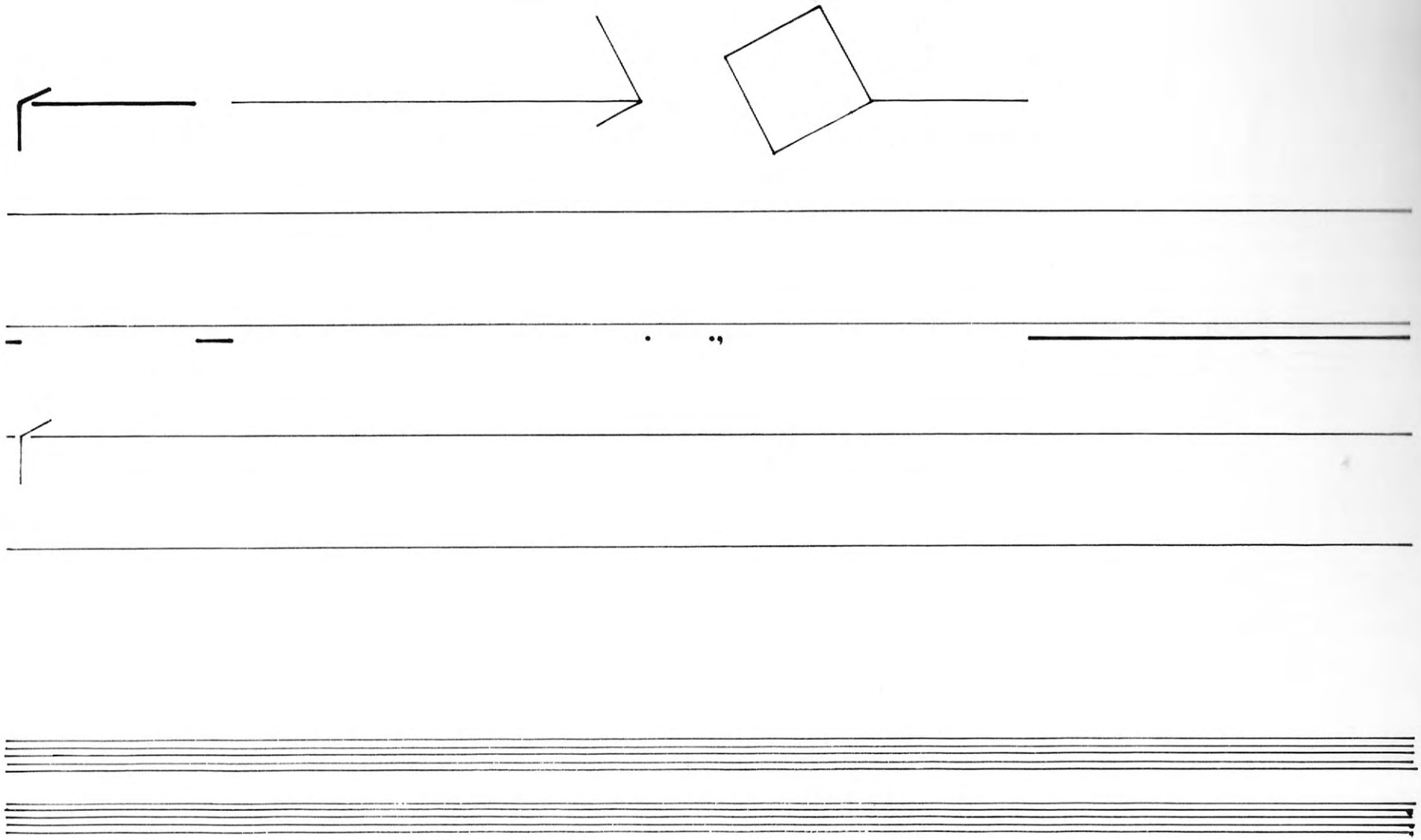

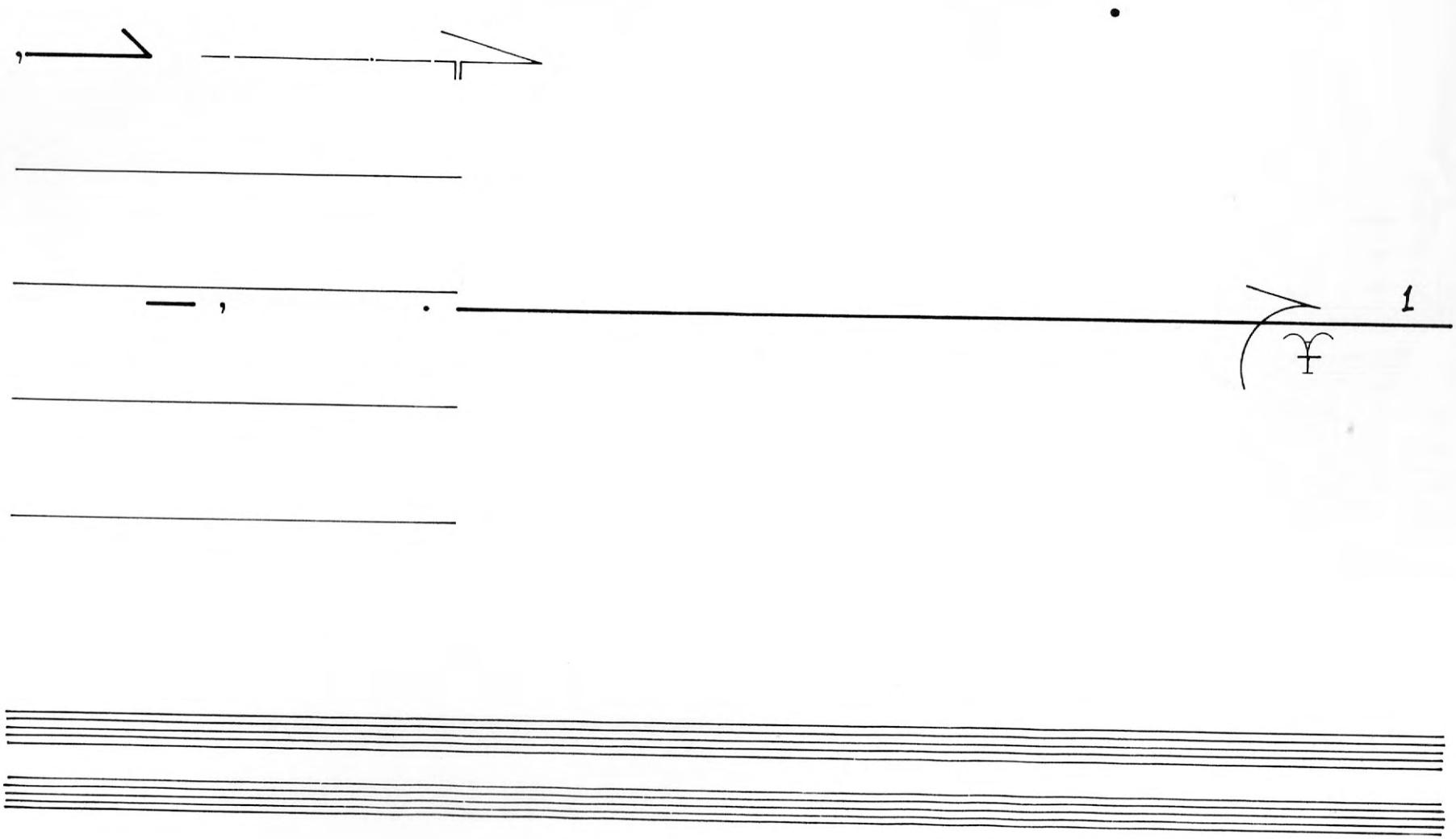
1

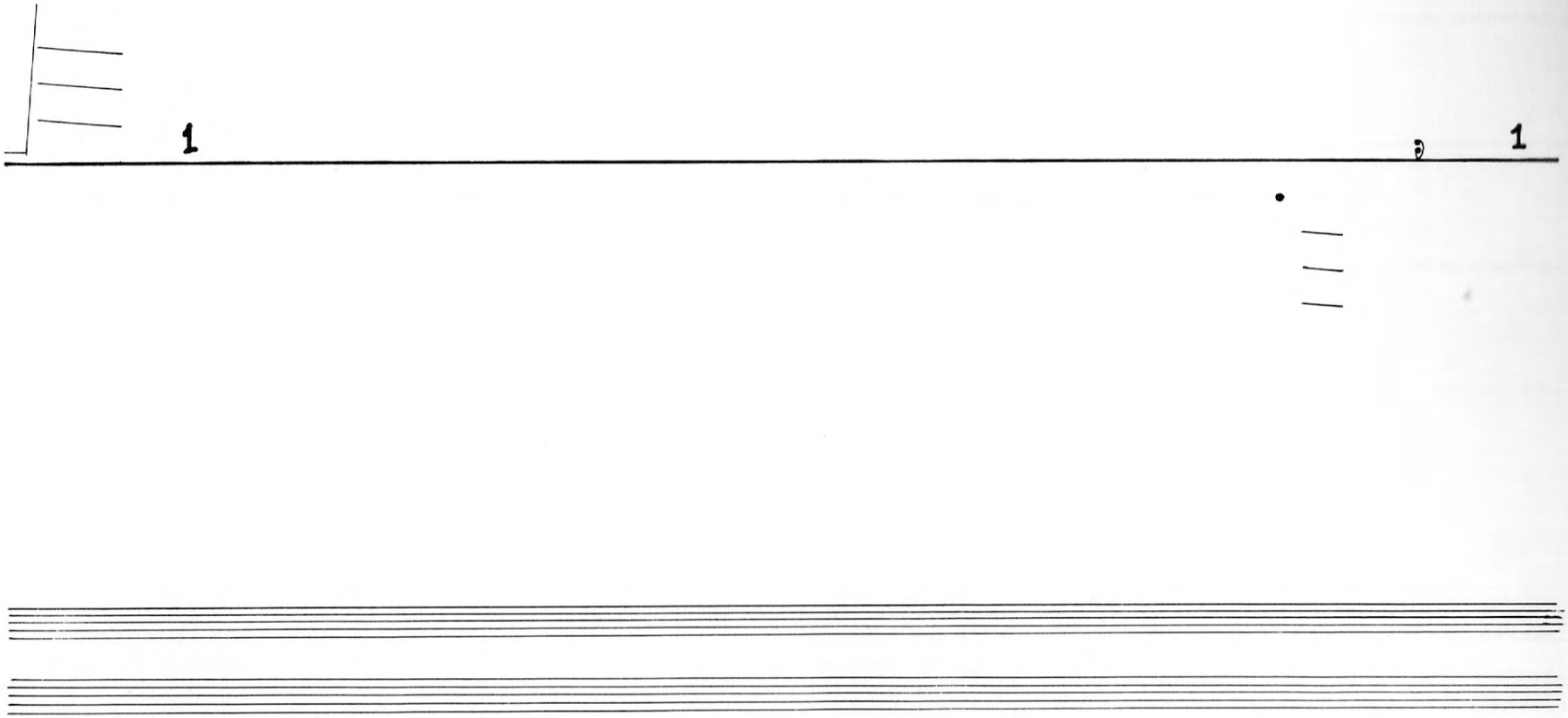
1
1

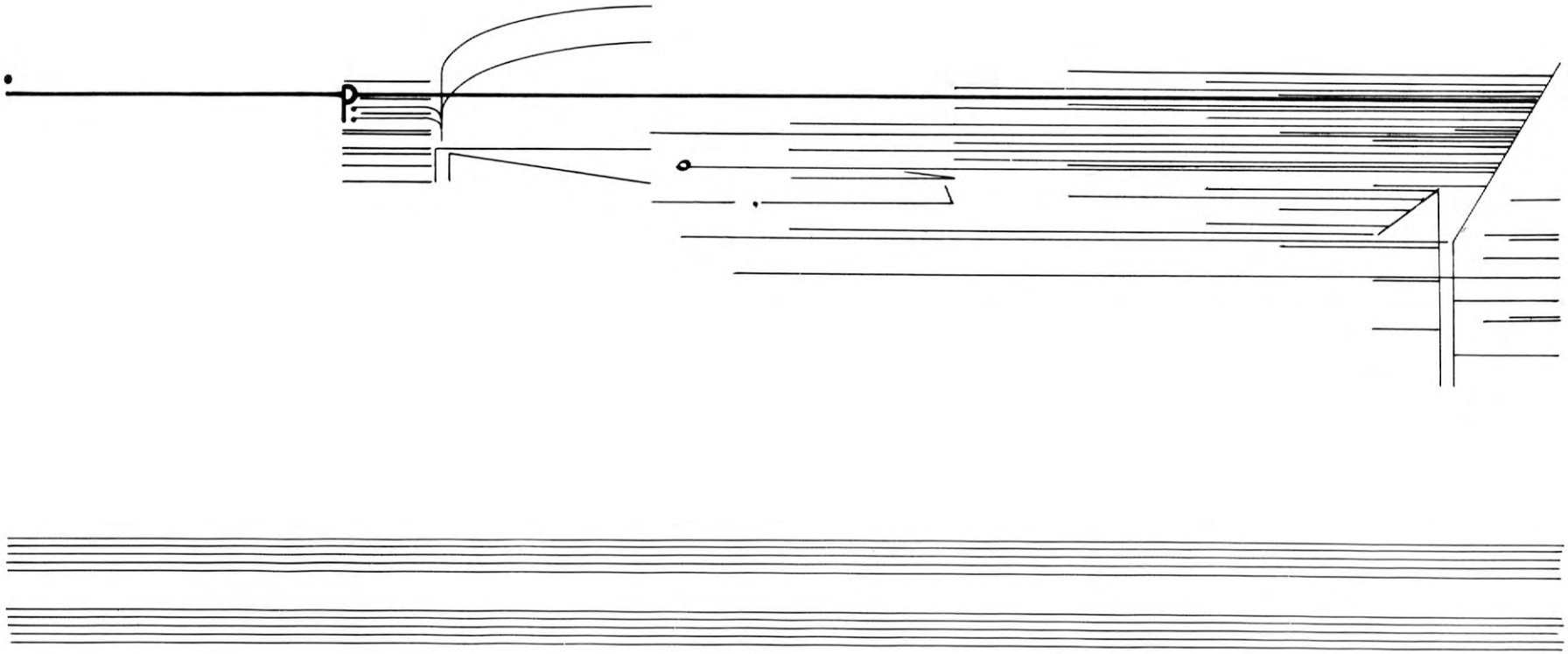

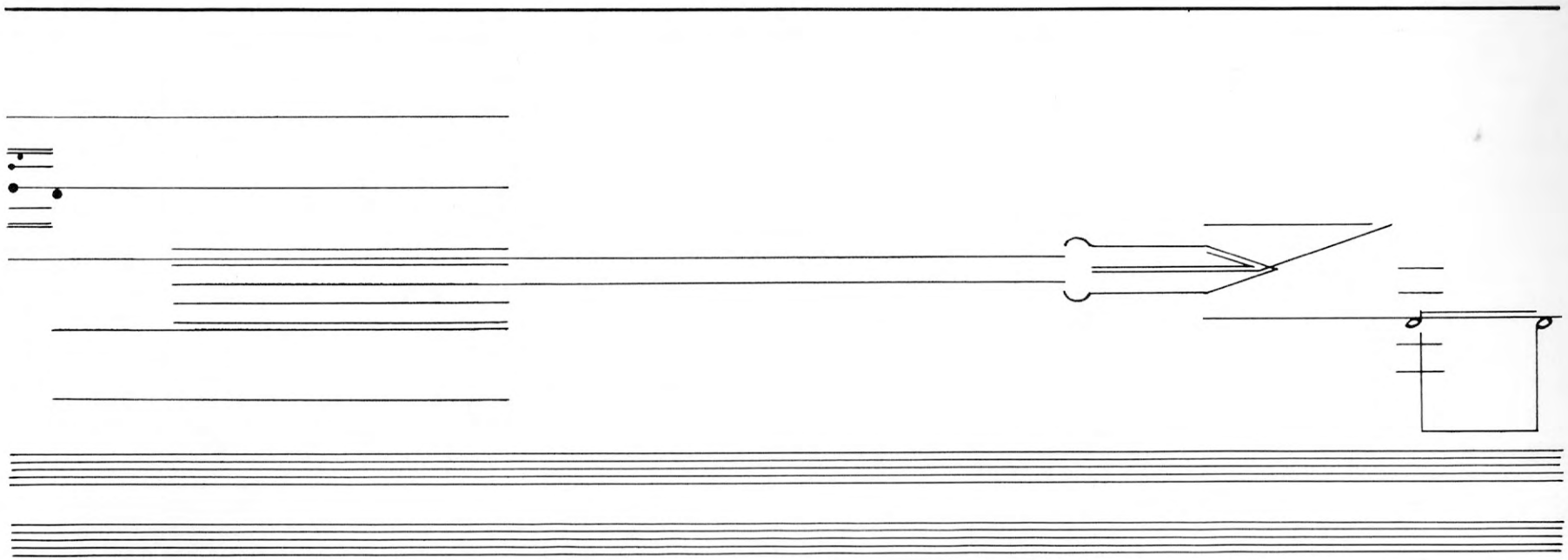

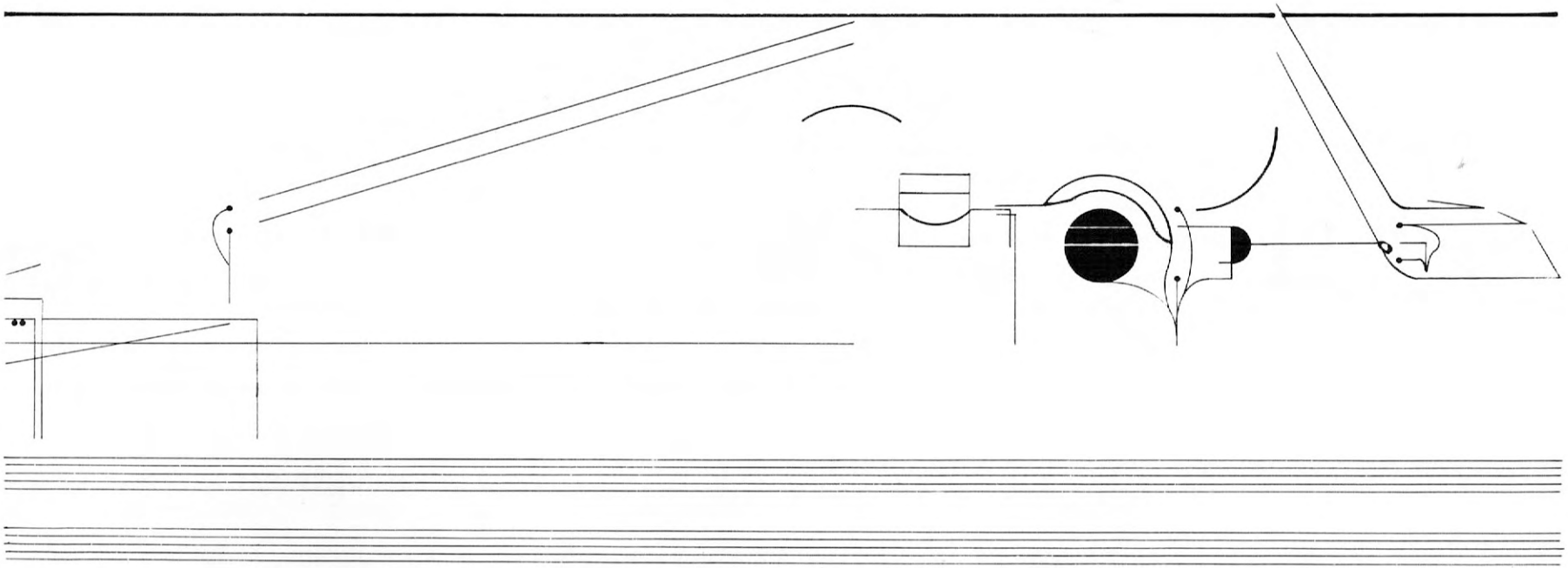

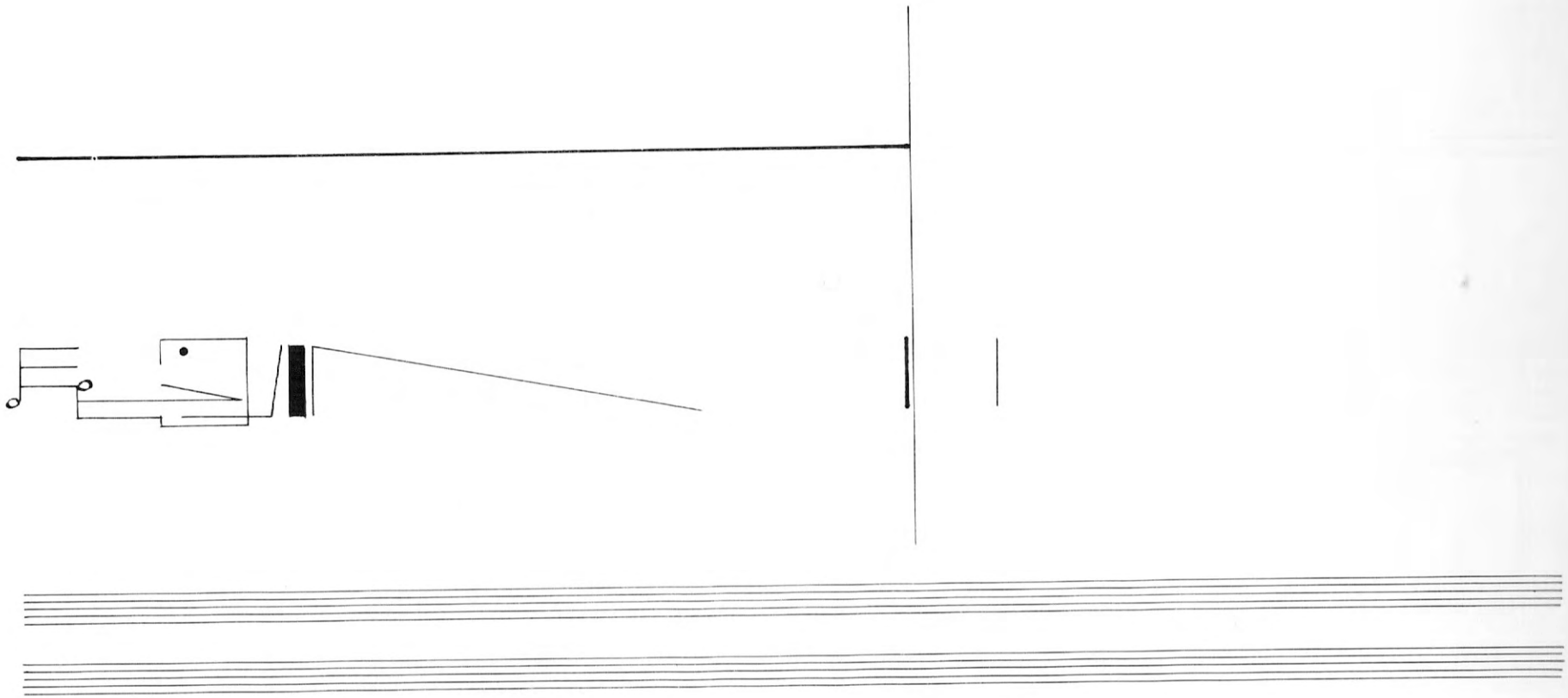

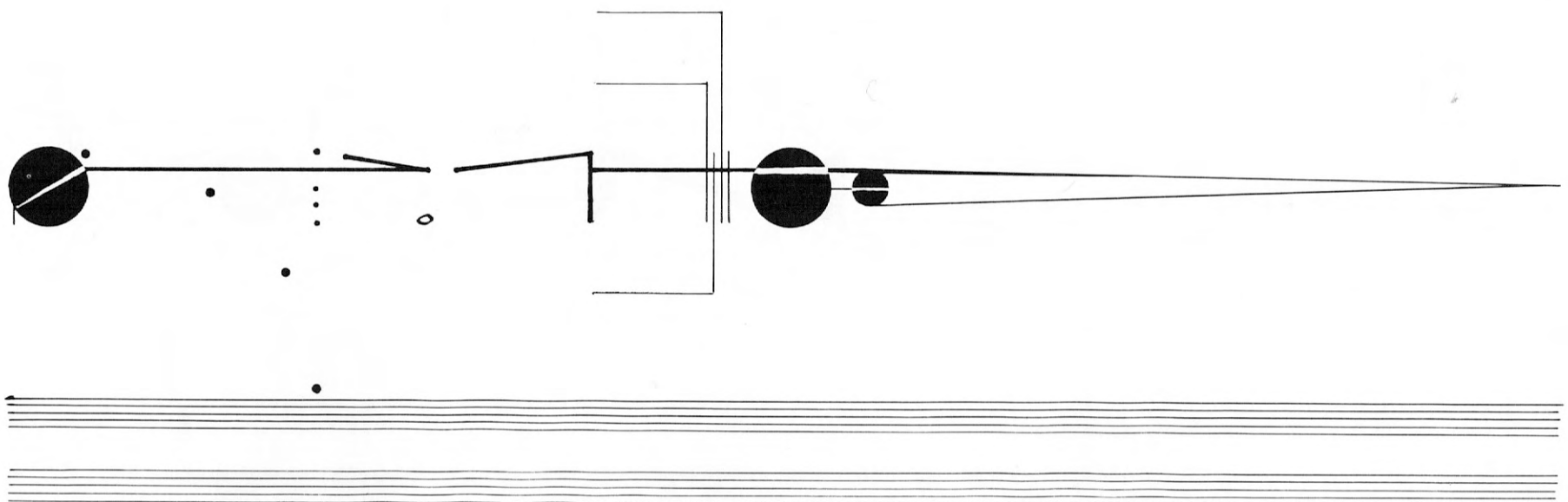

1

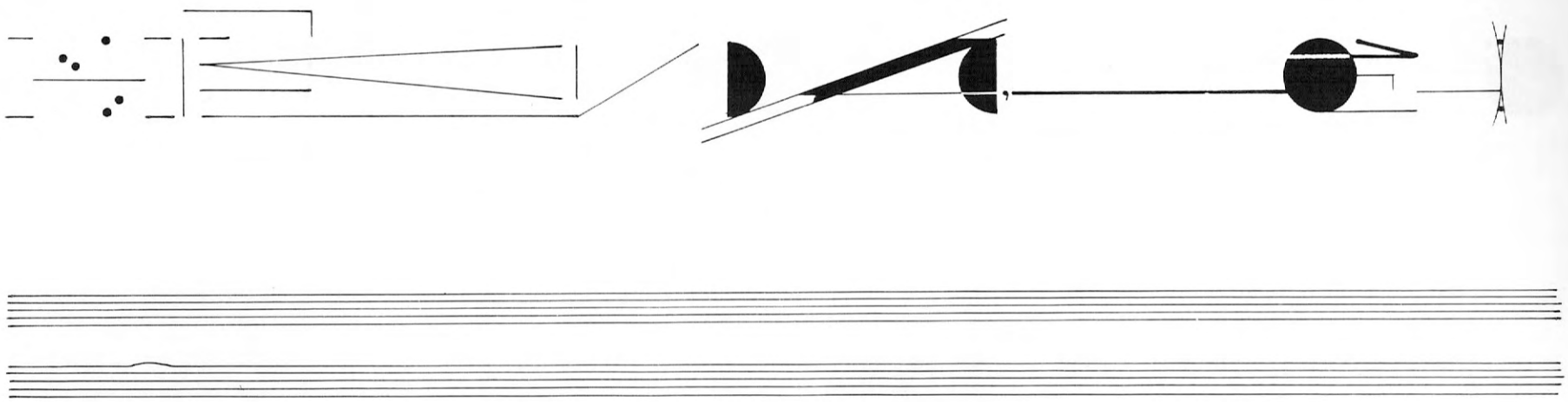

1

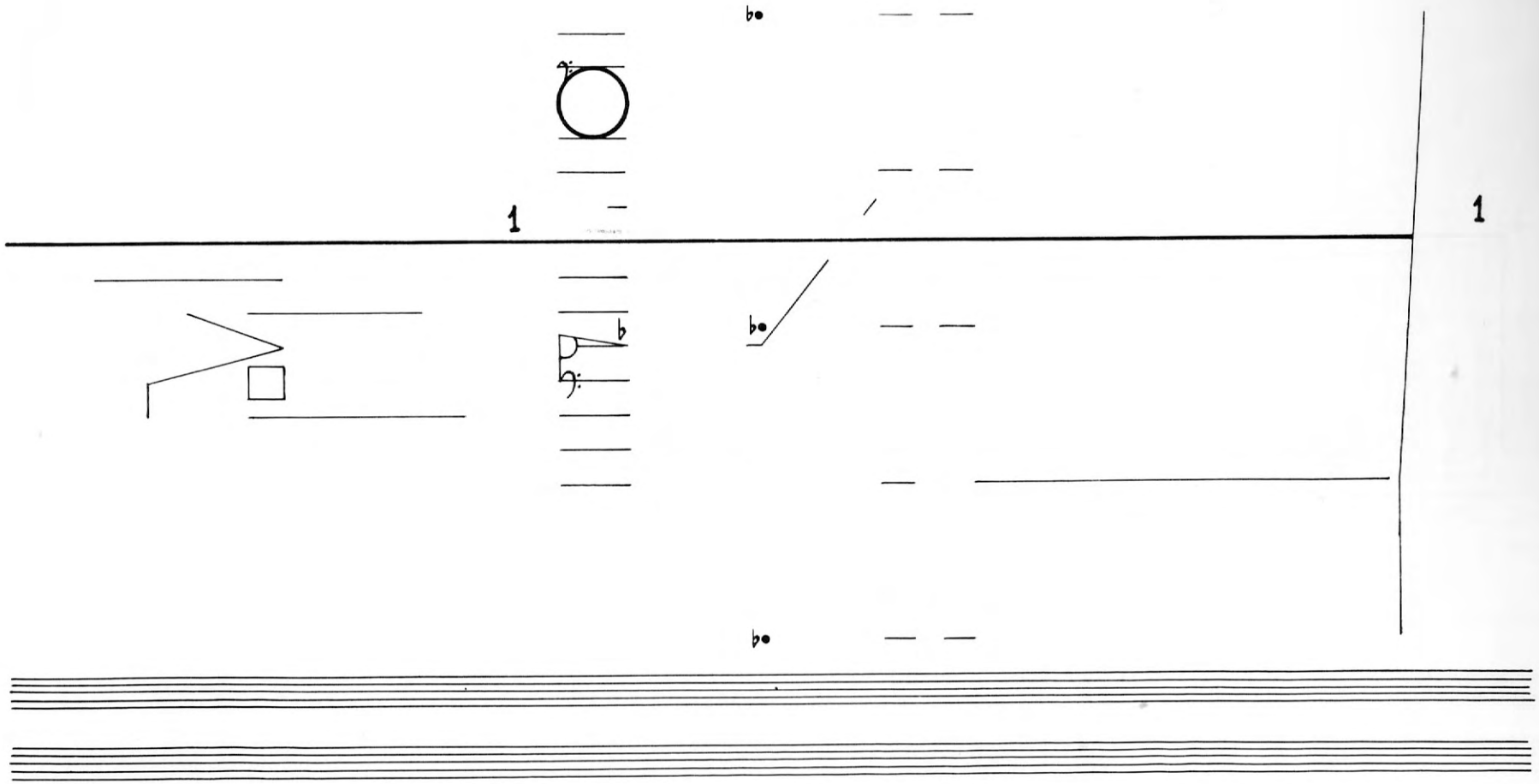
1
1

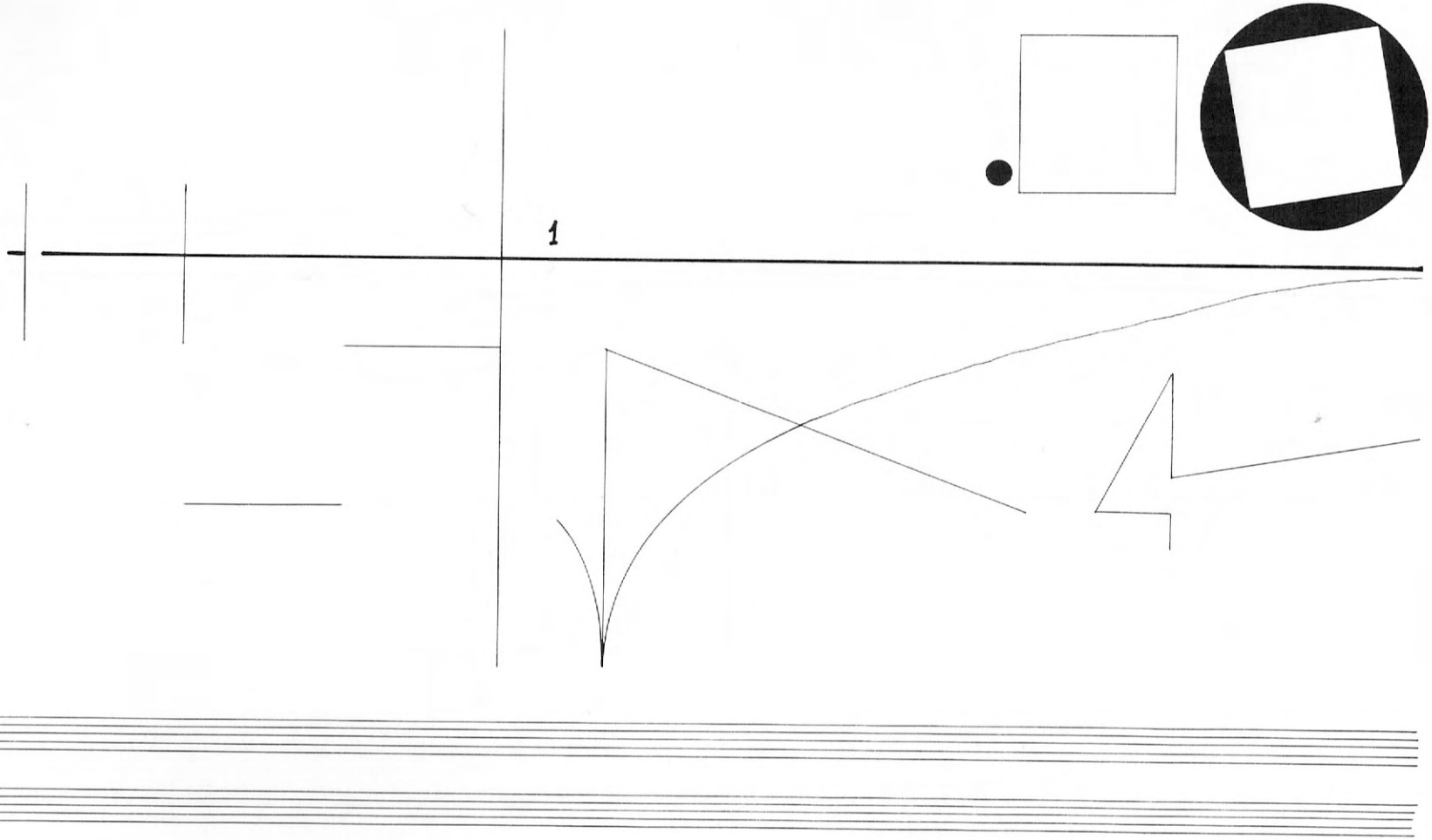
1

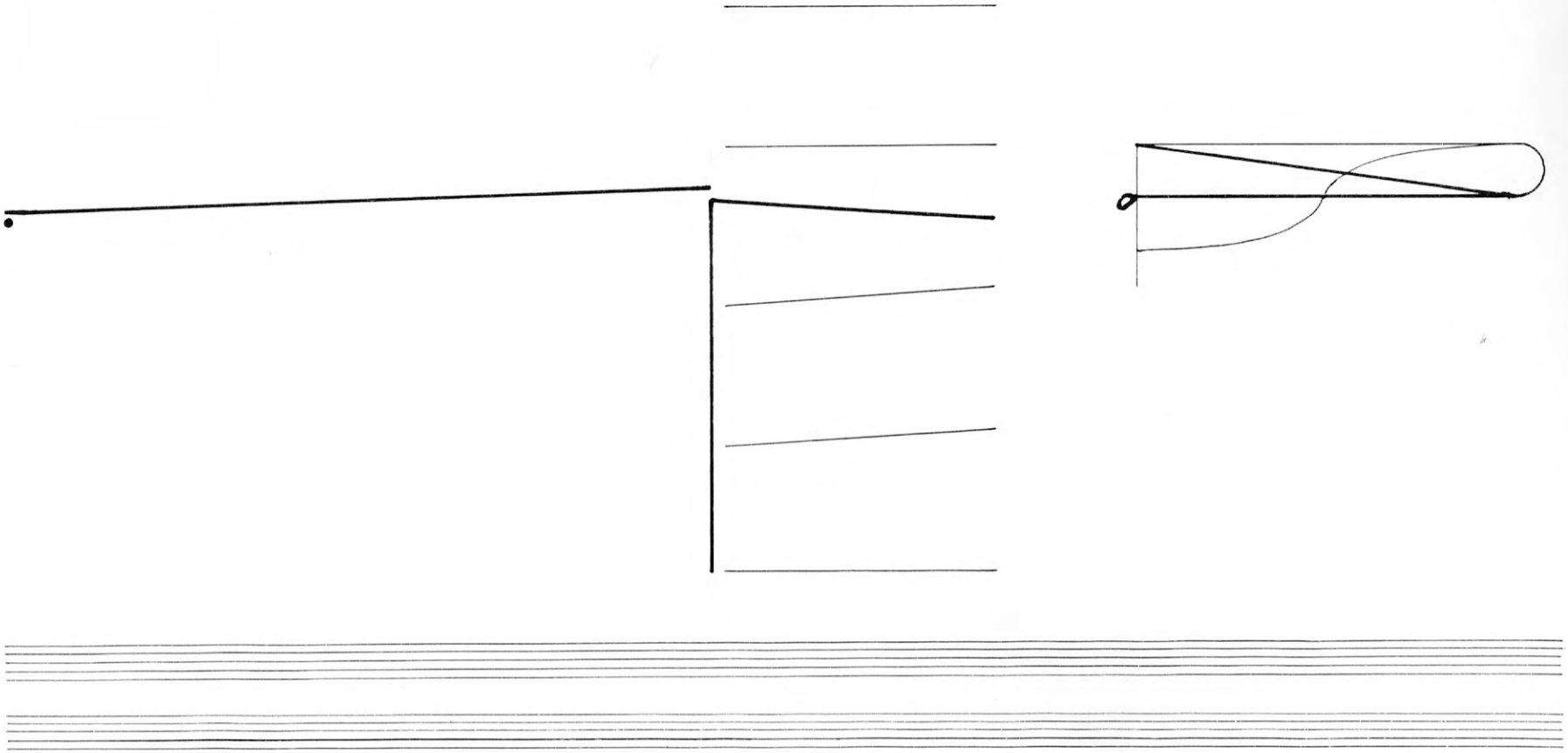

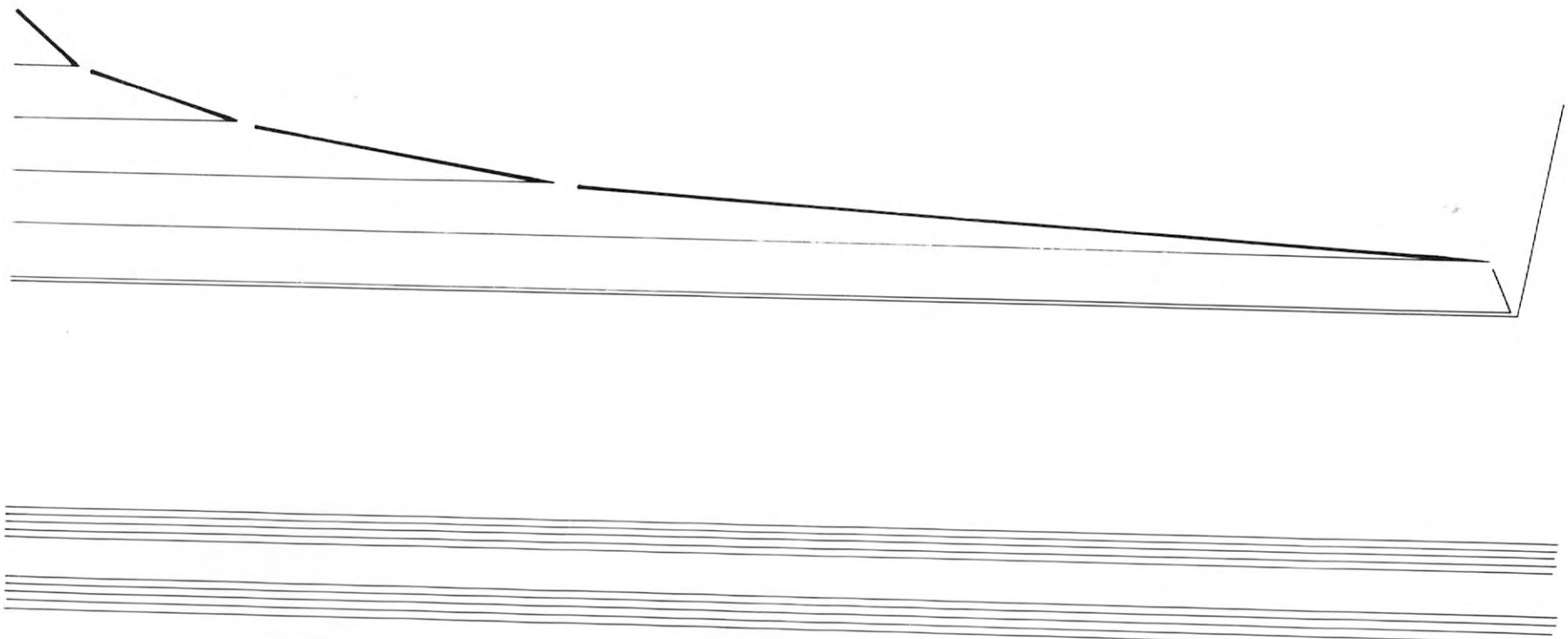

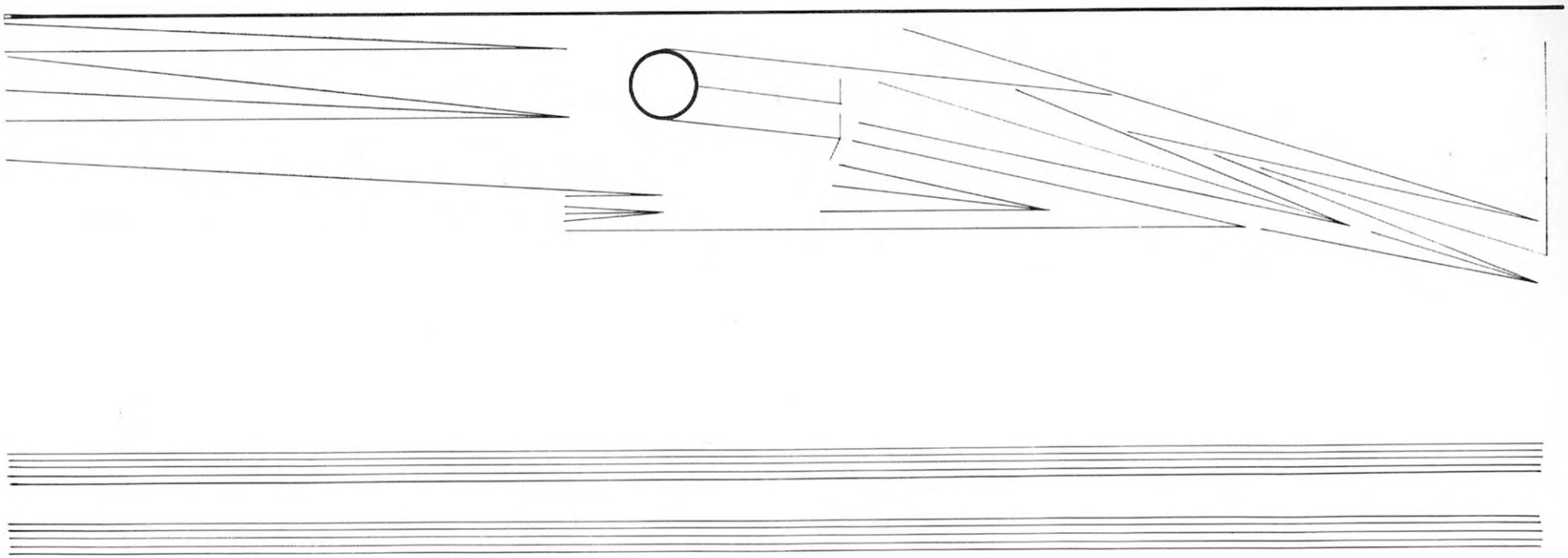

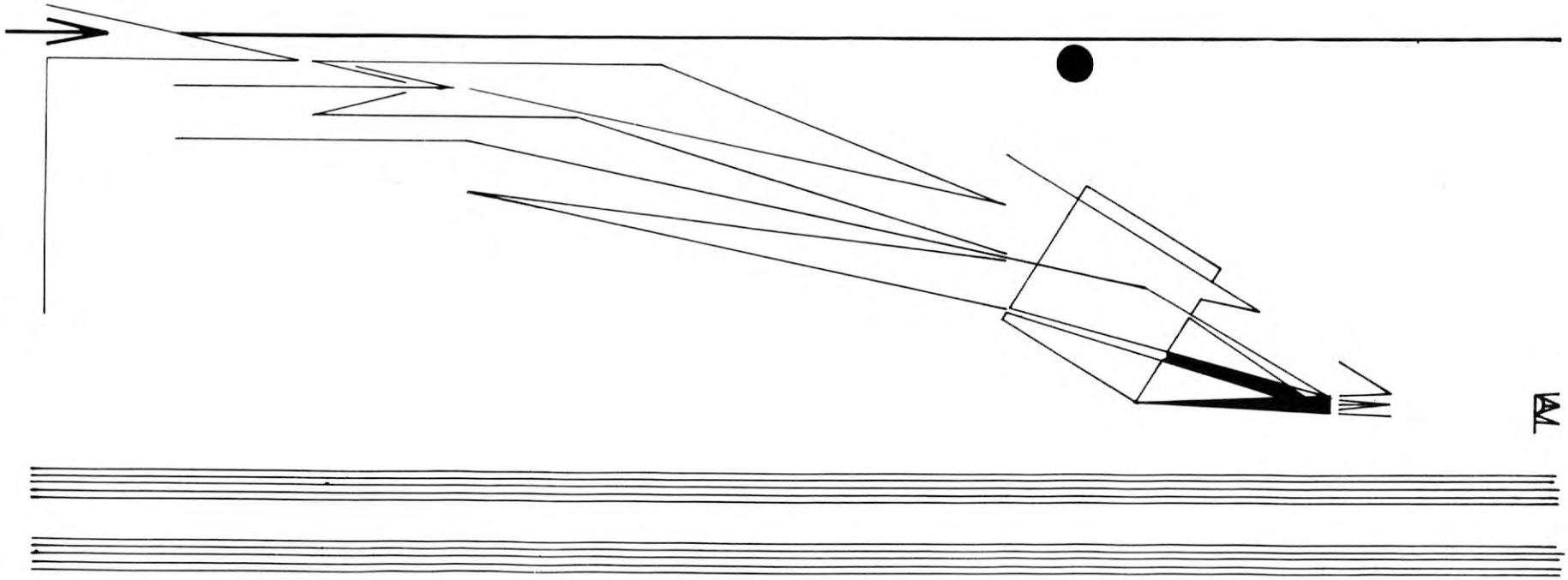

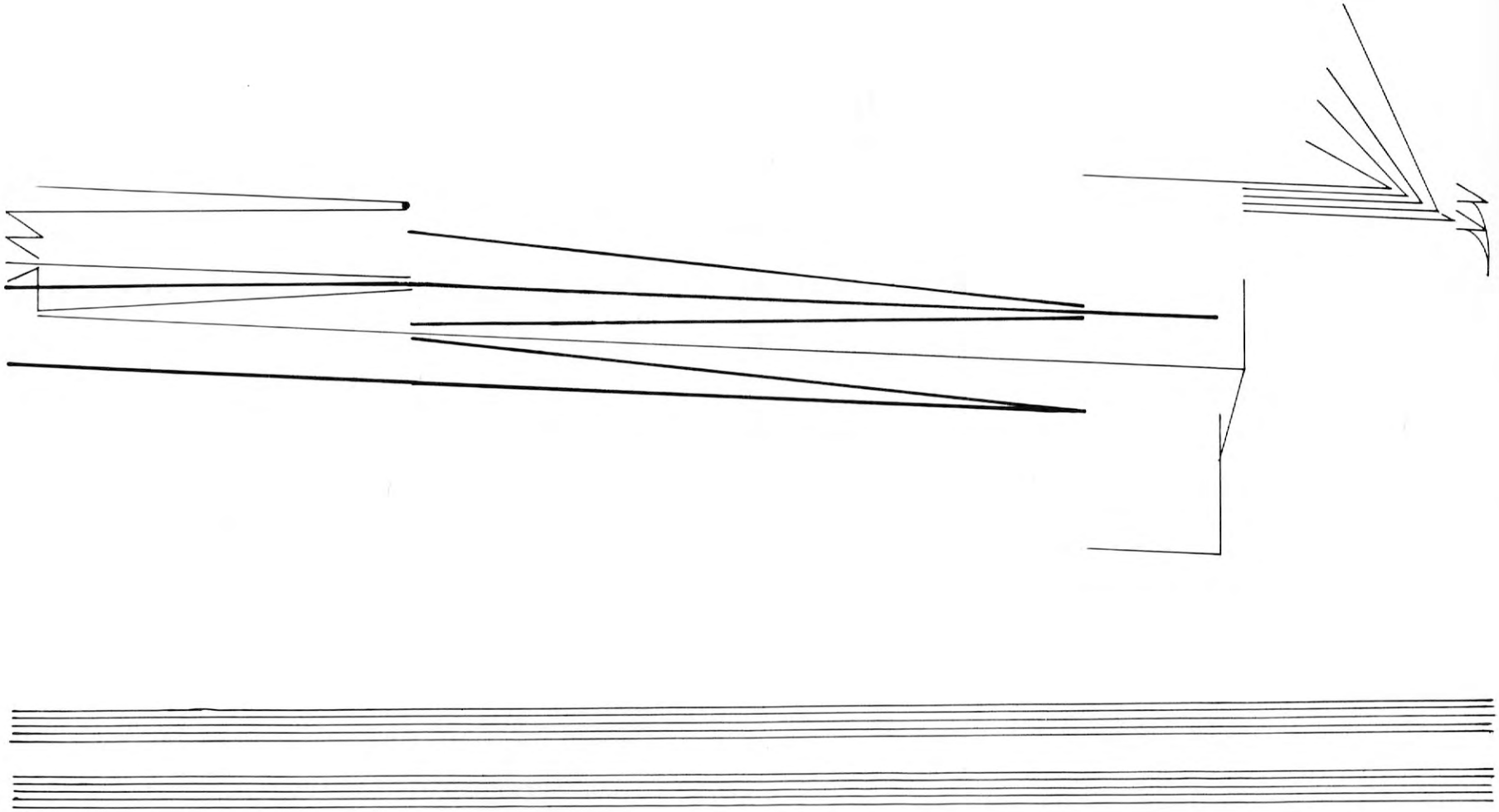

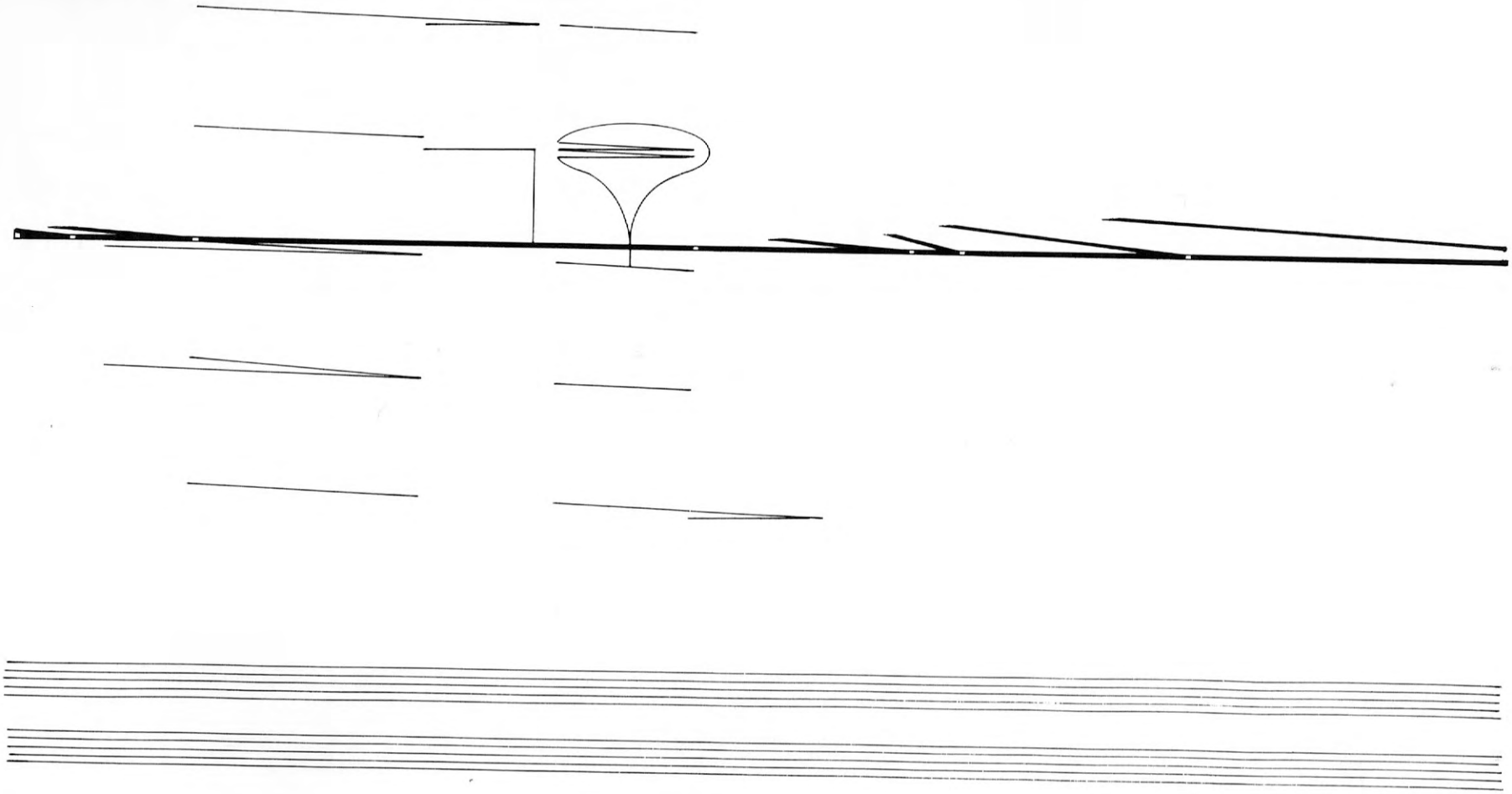

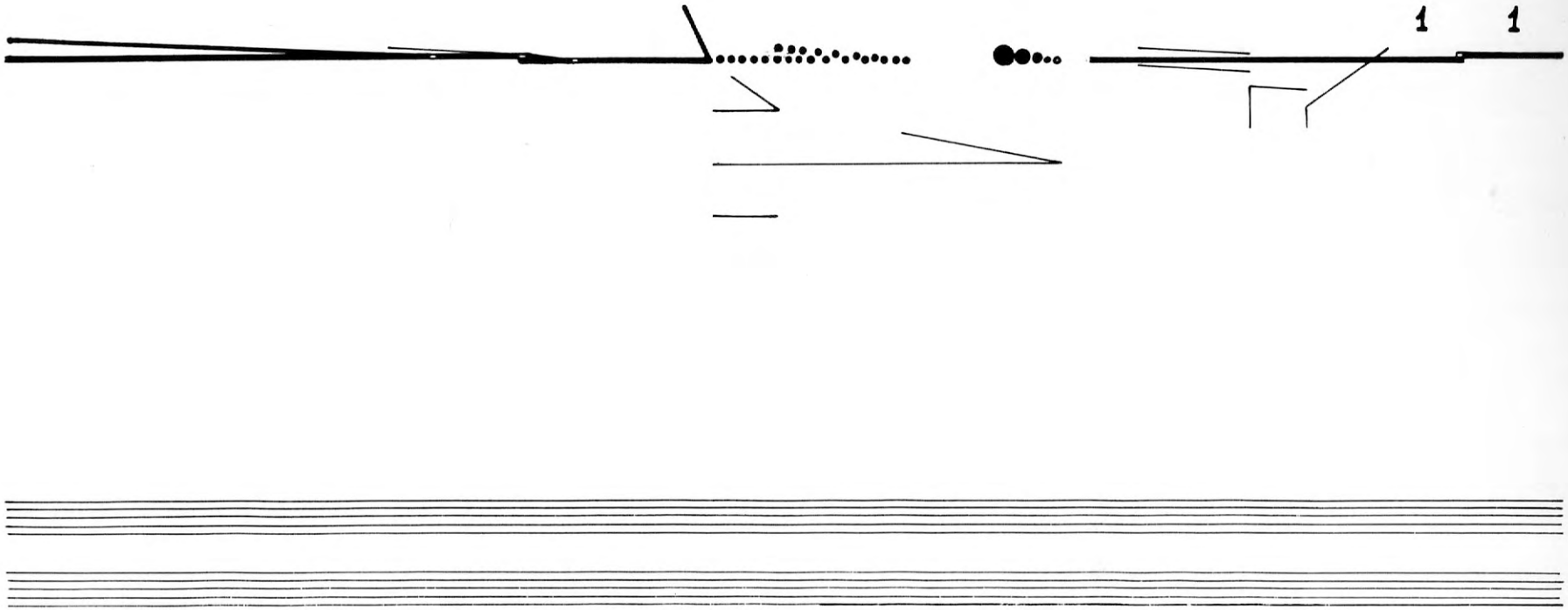
1
1

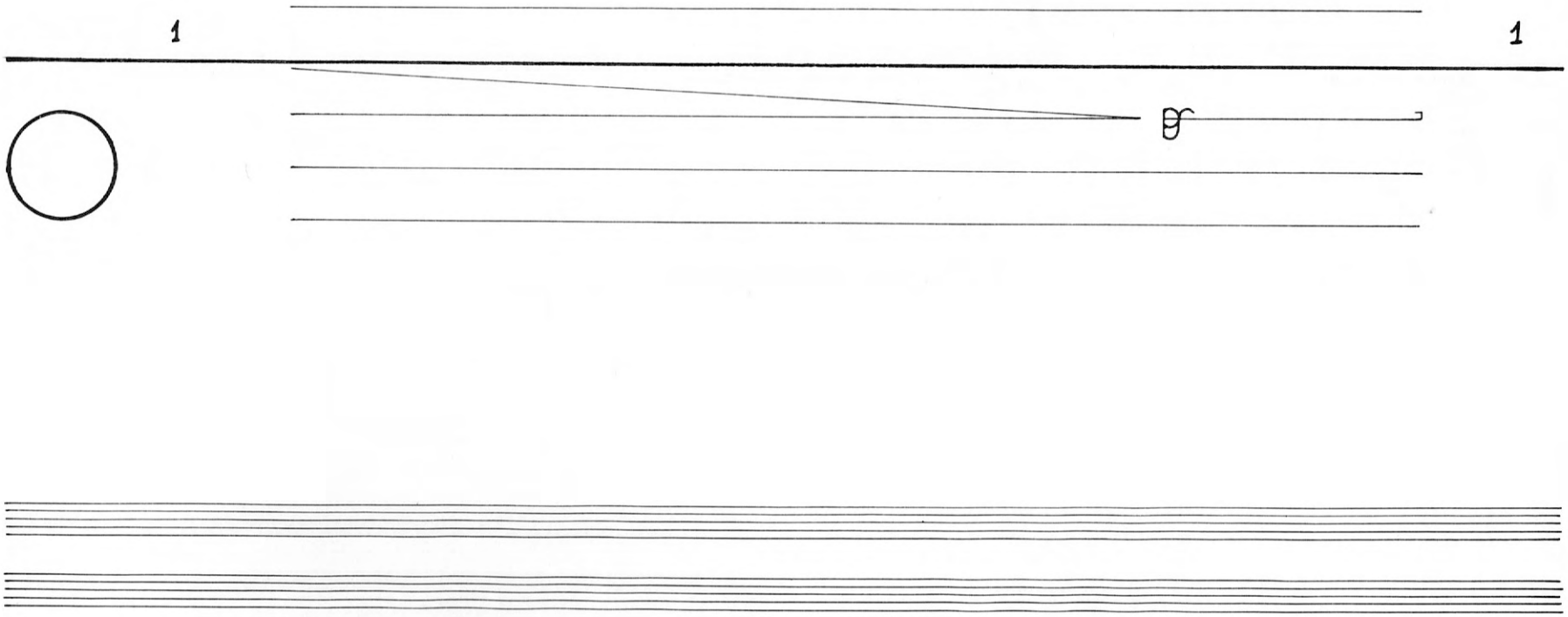
1
1

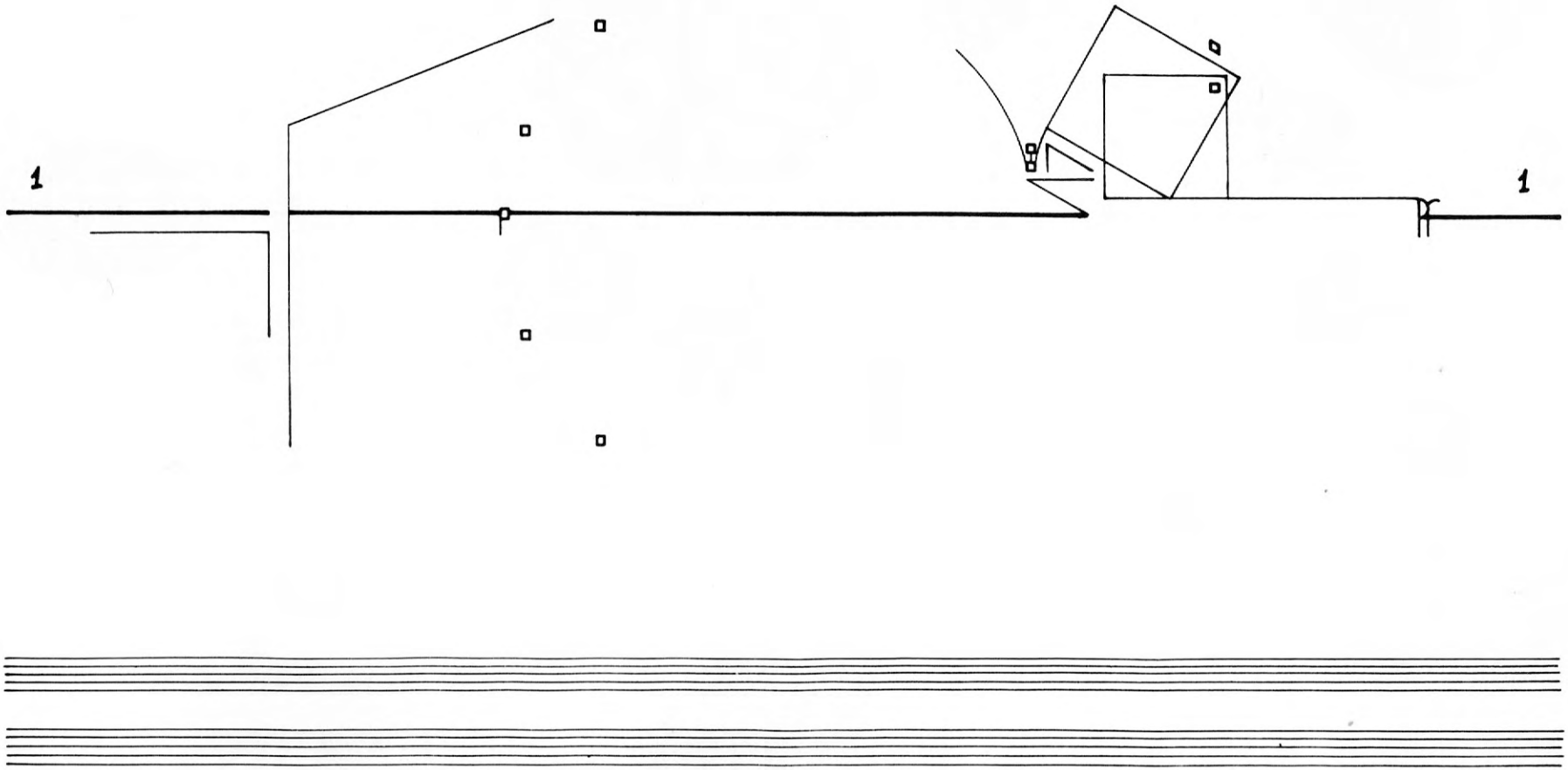
1
1

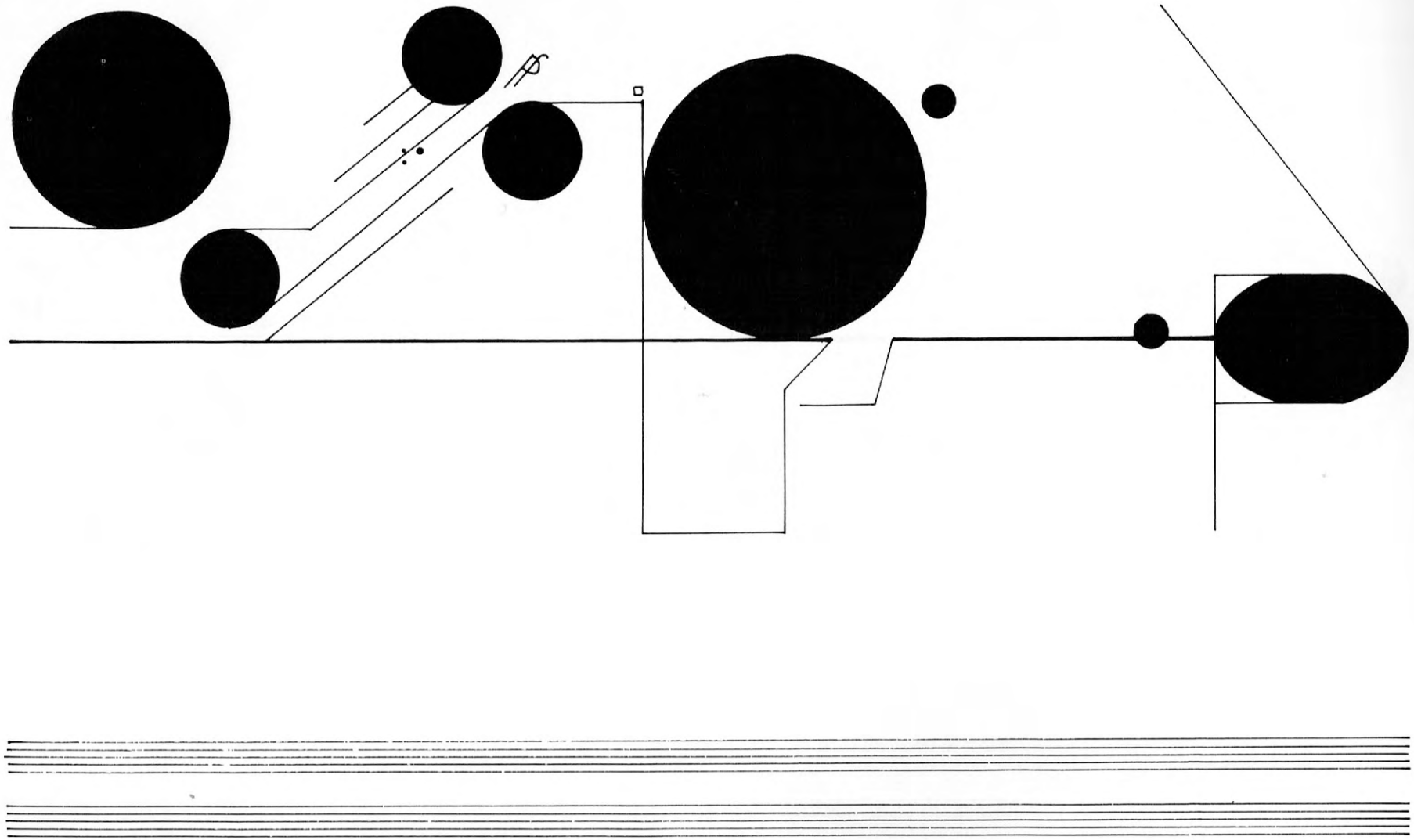

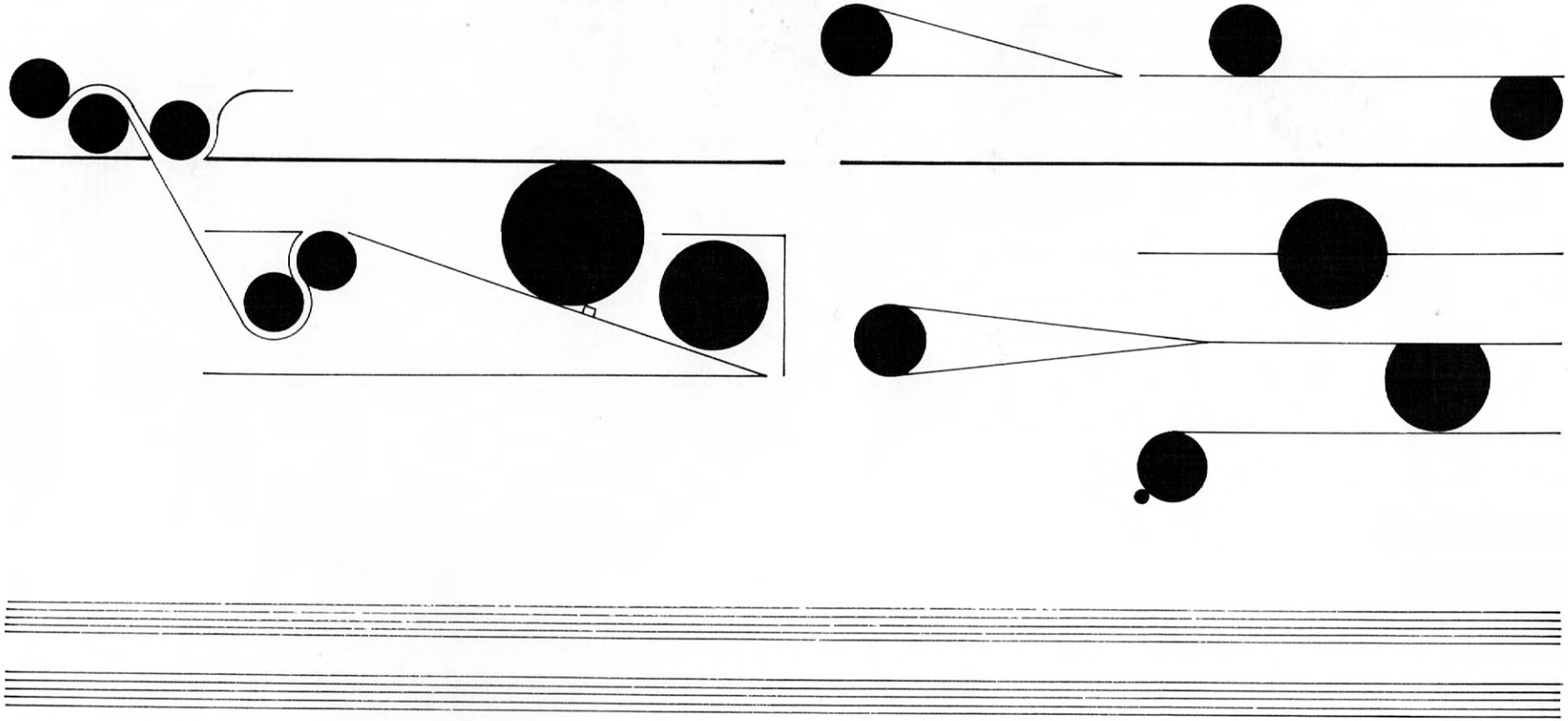

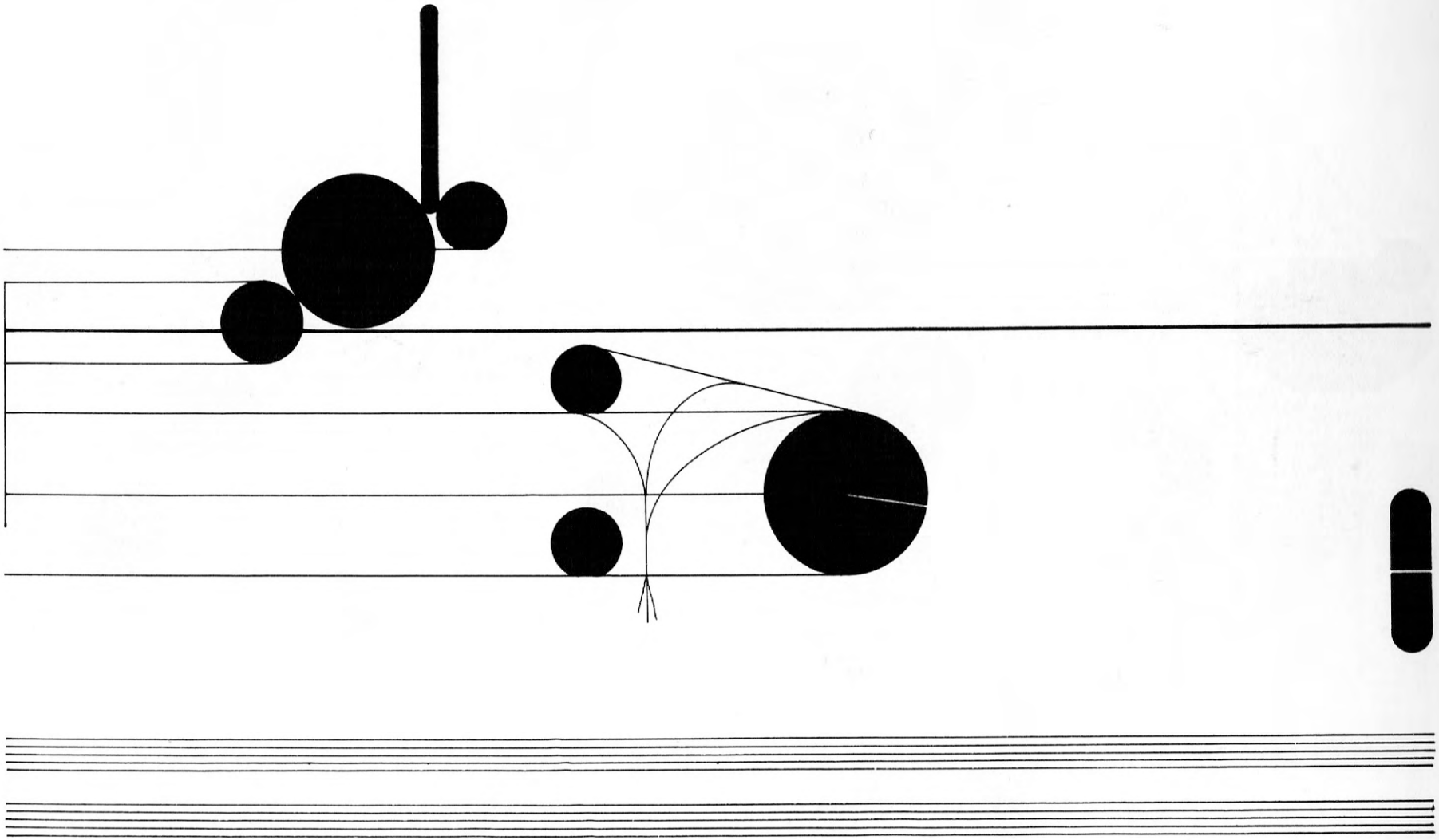

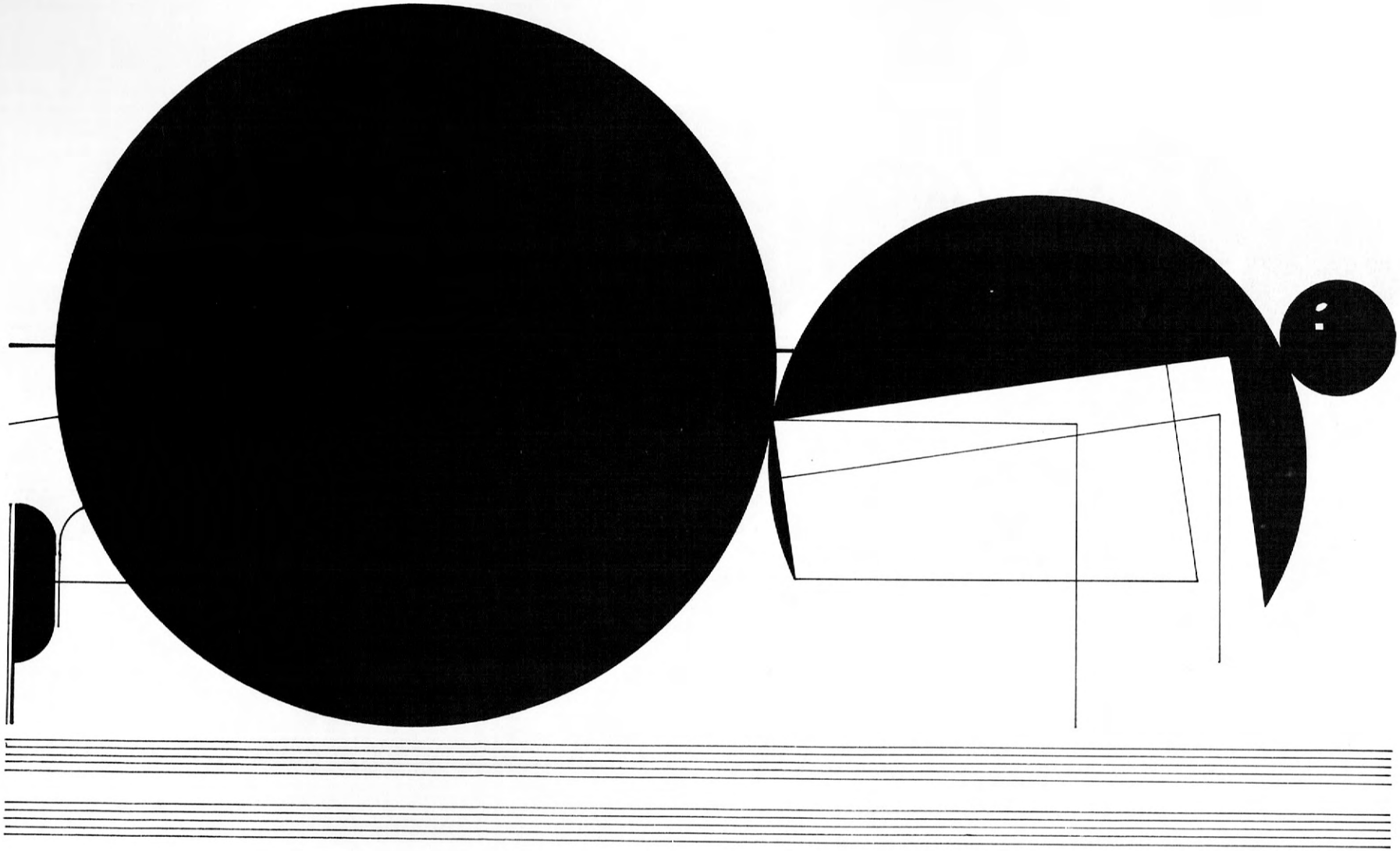

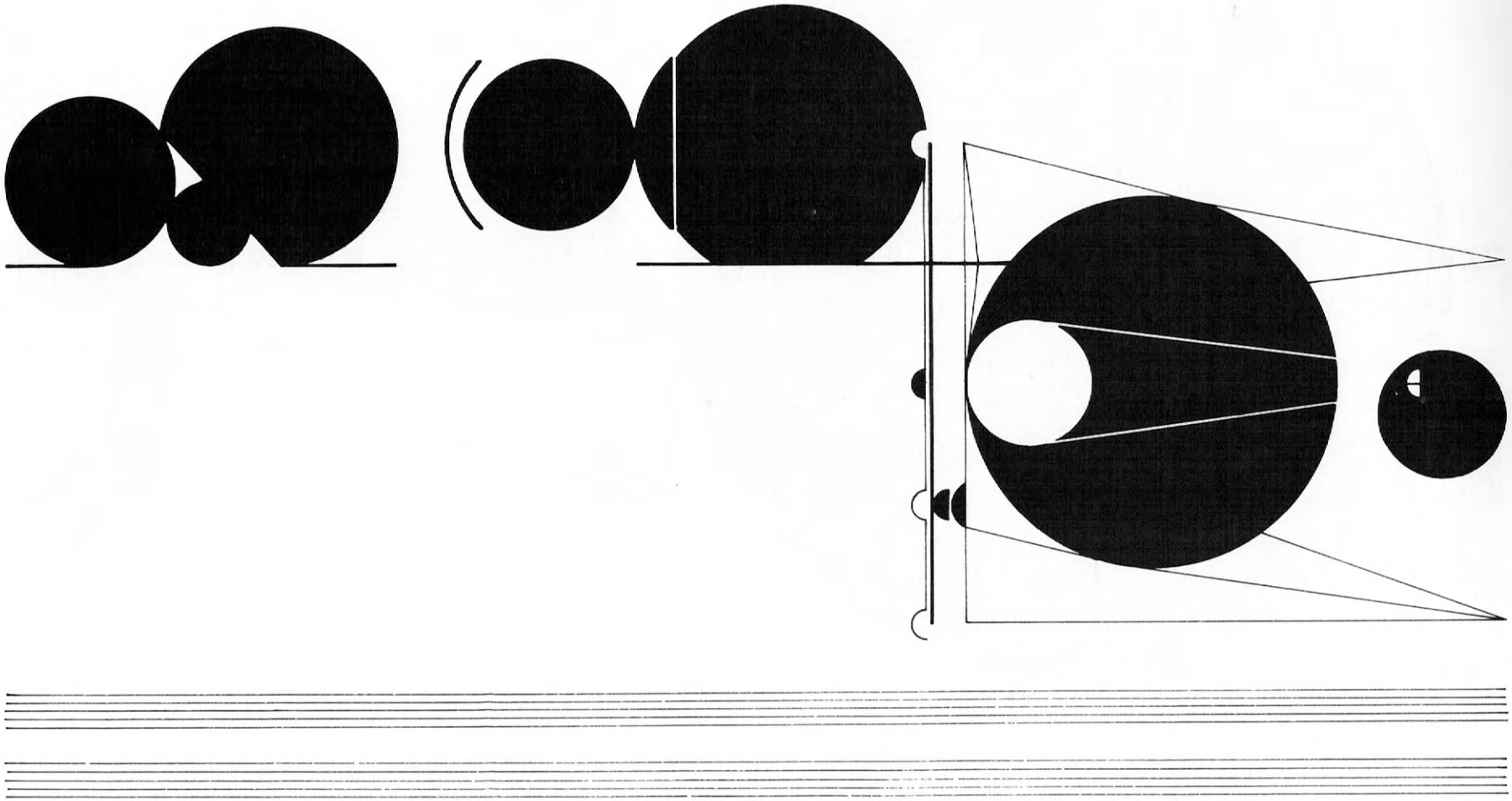

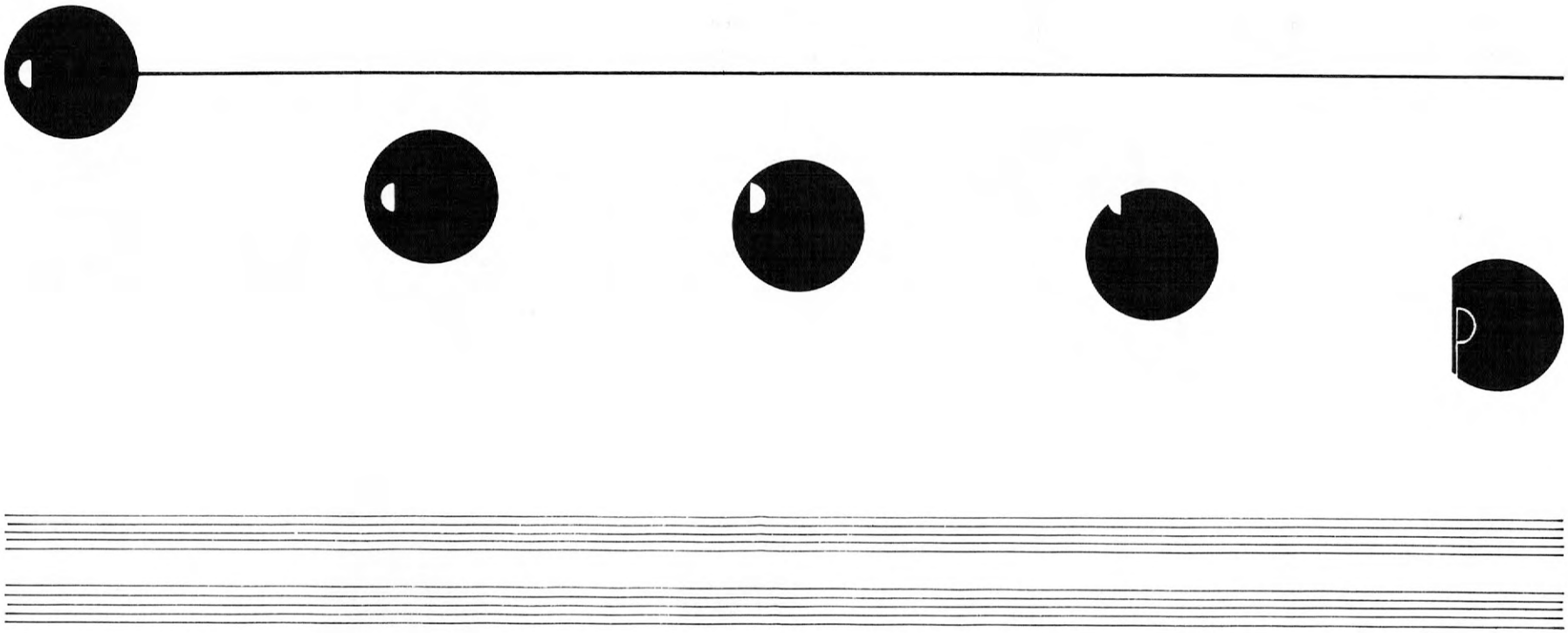

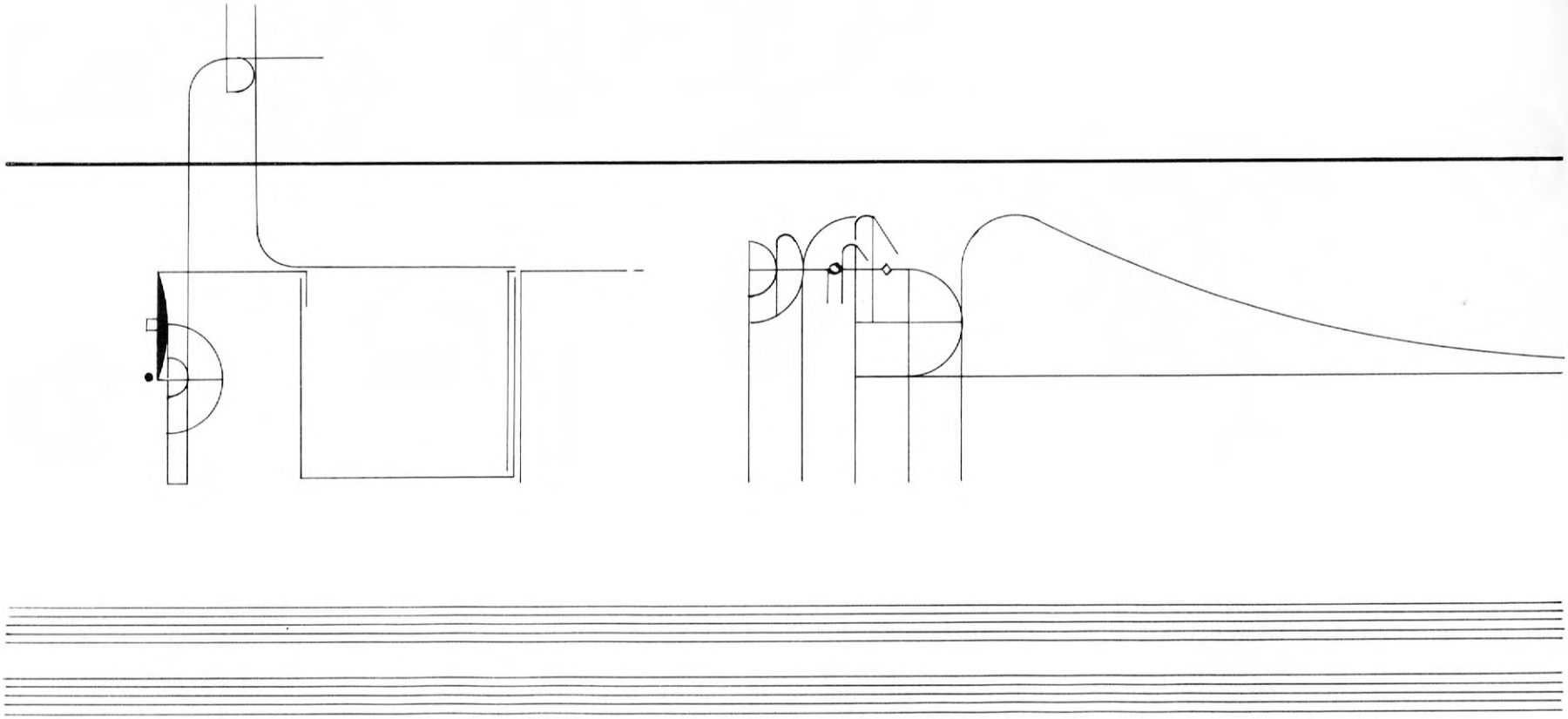

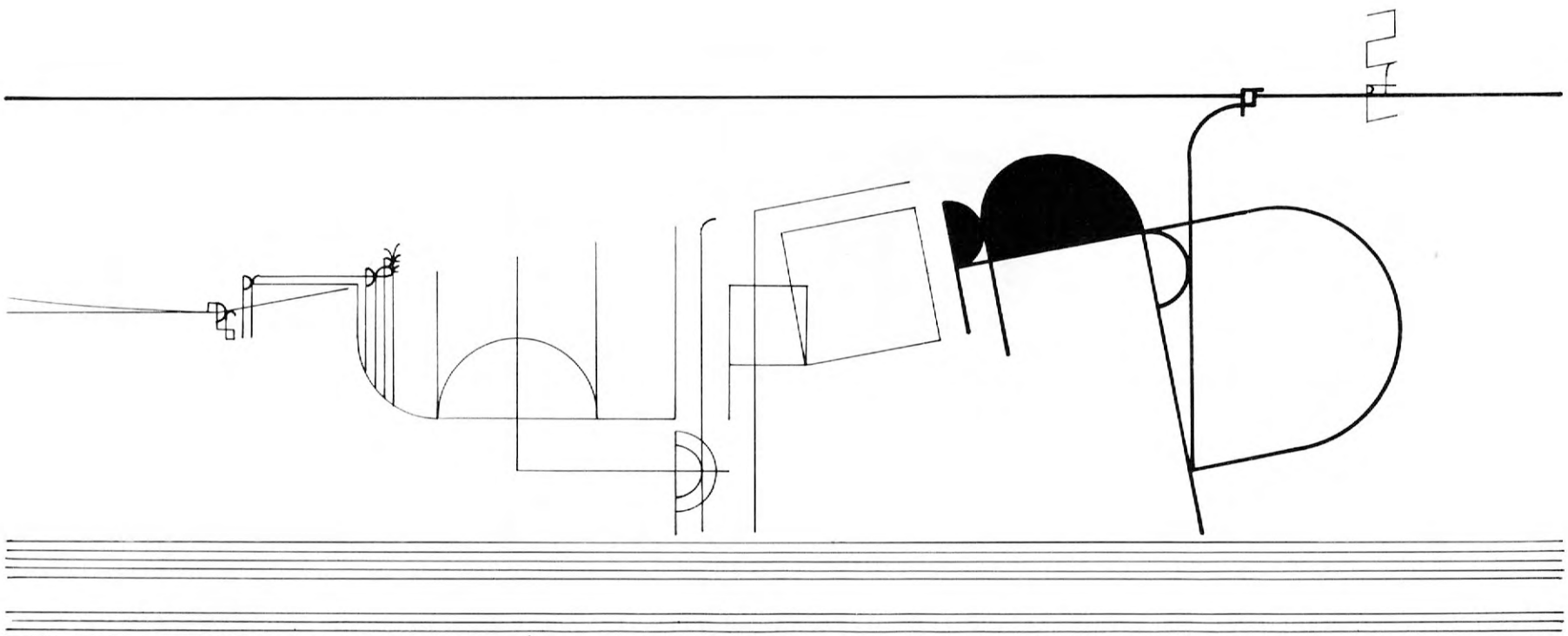

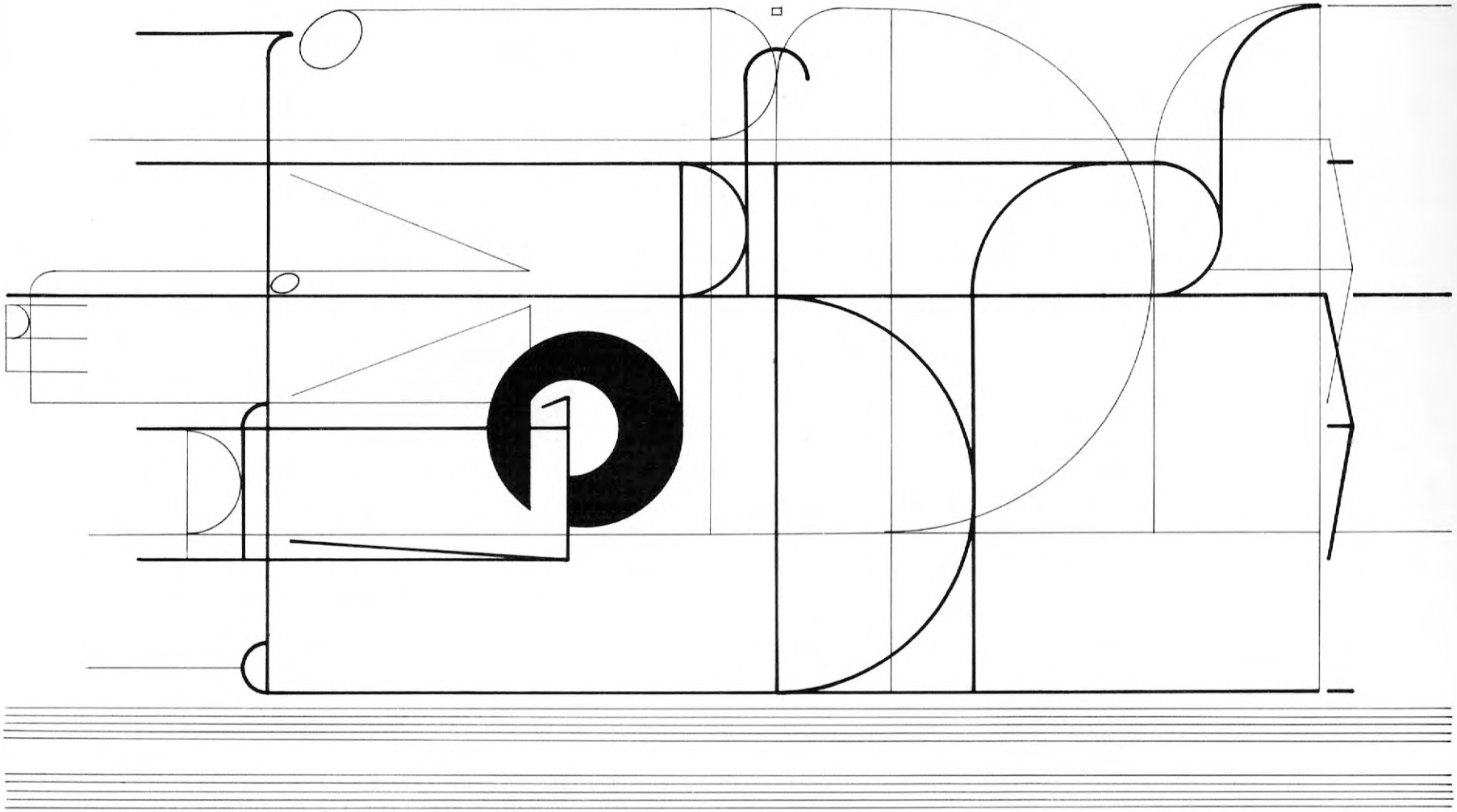

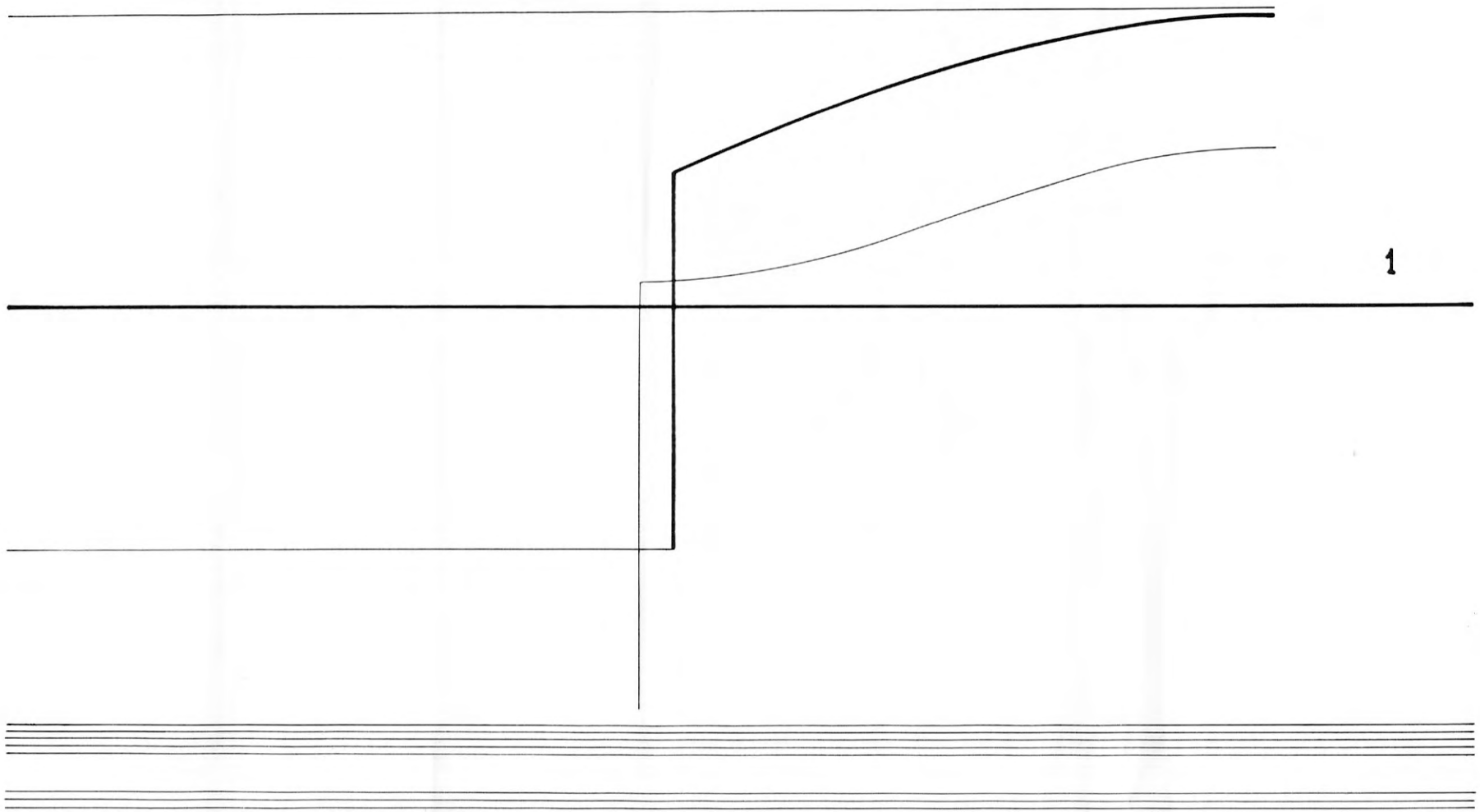
1

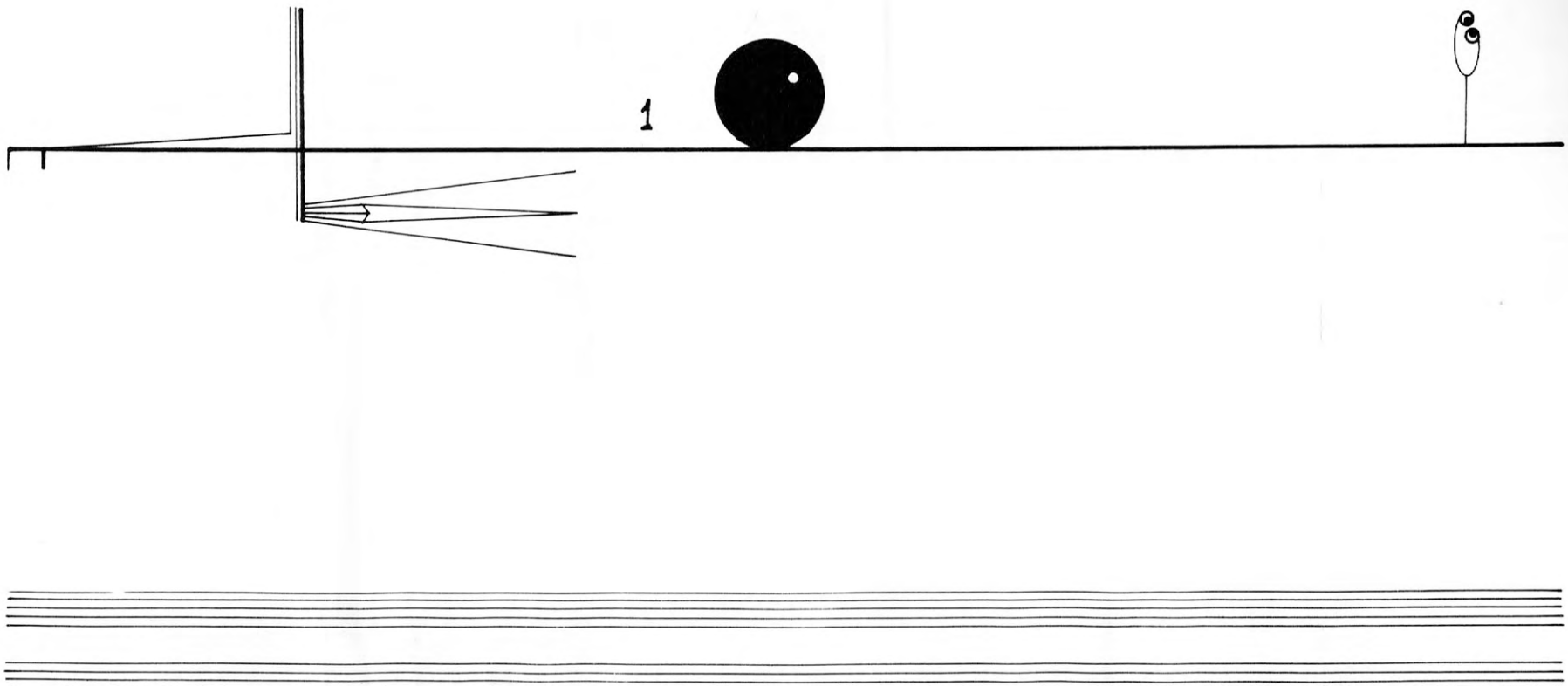
1

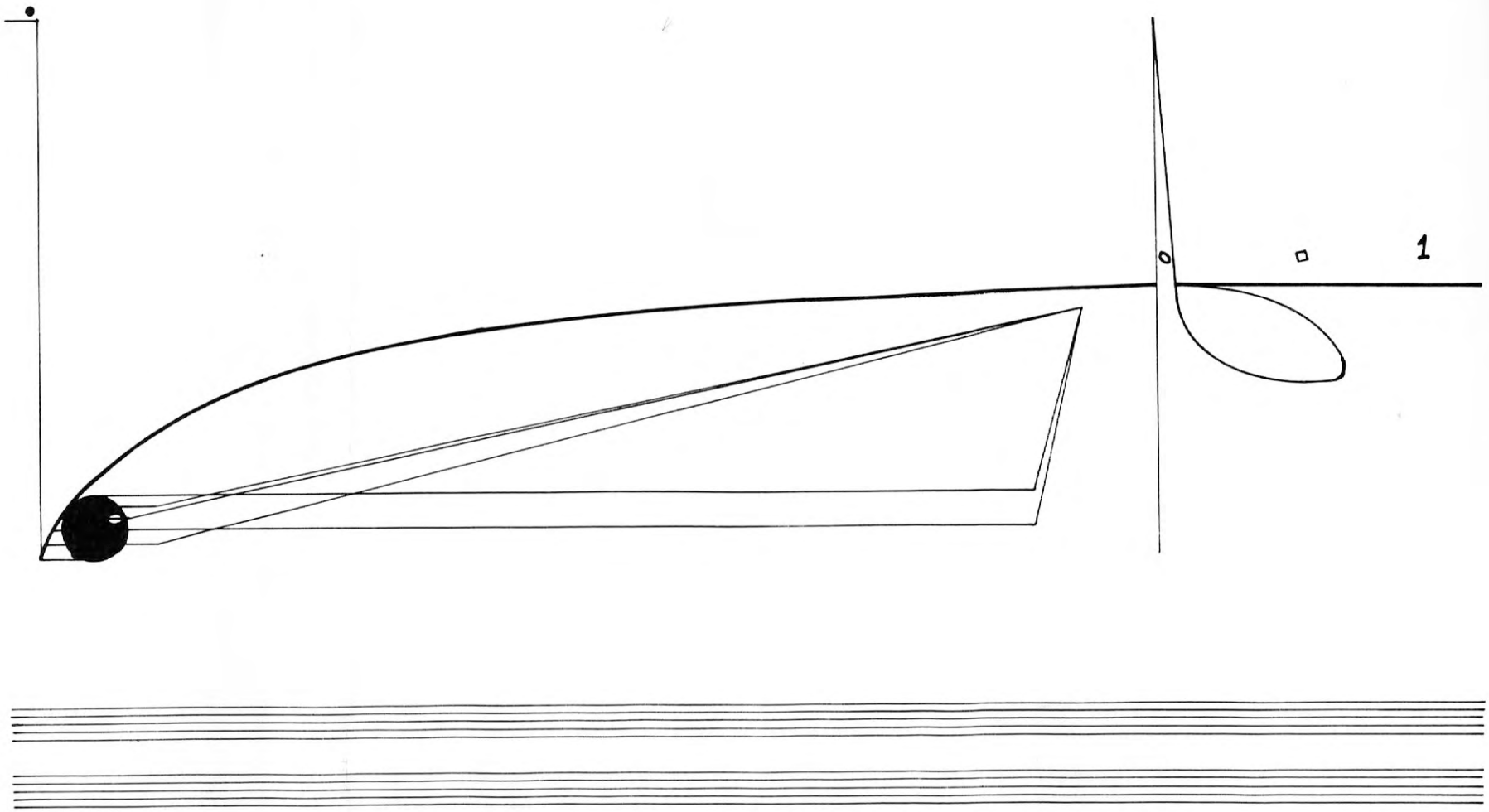
1

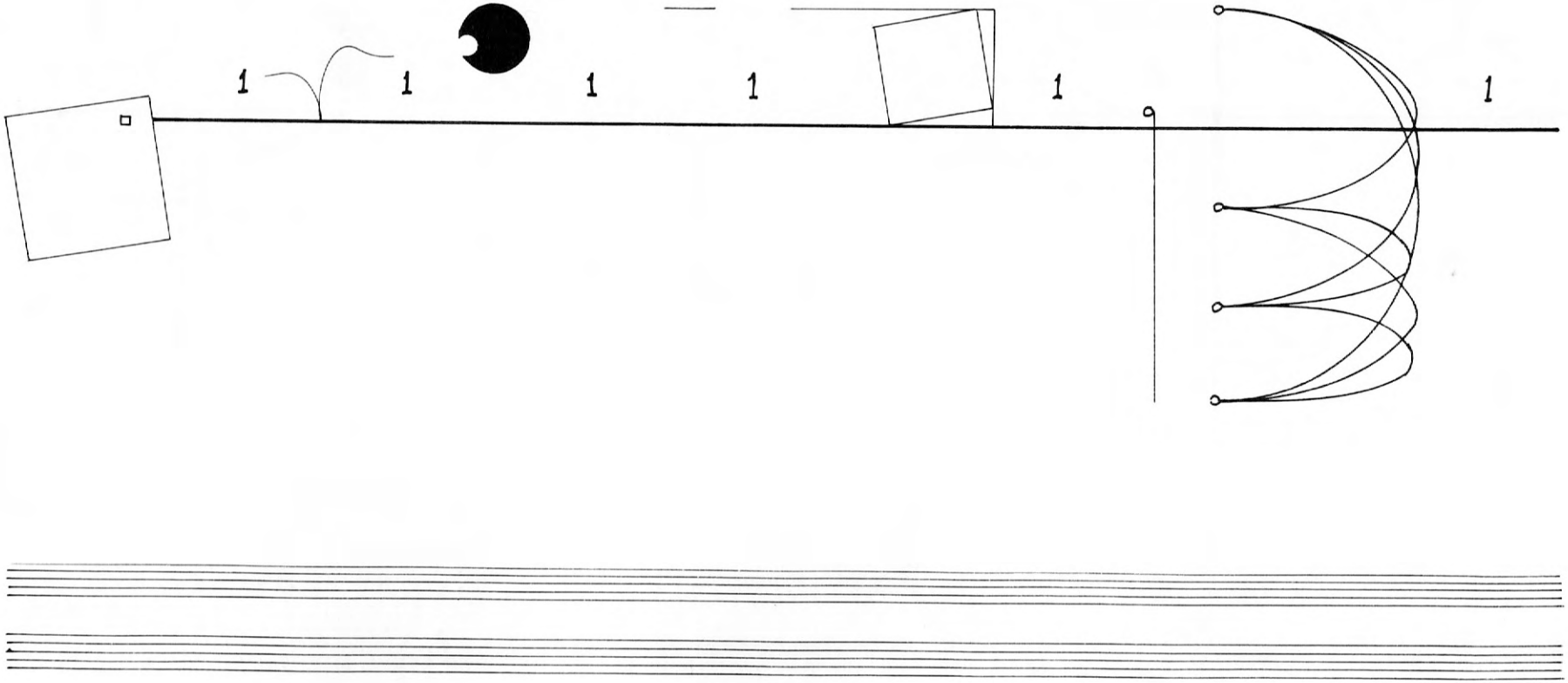
1
1
1
1
1
1

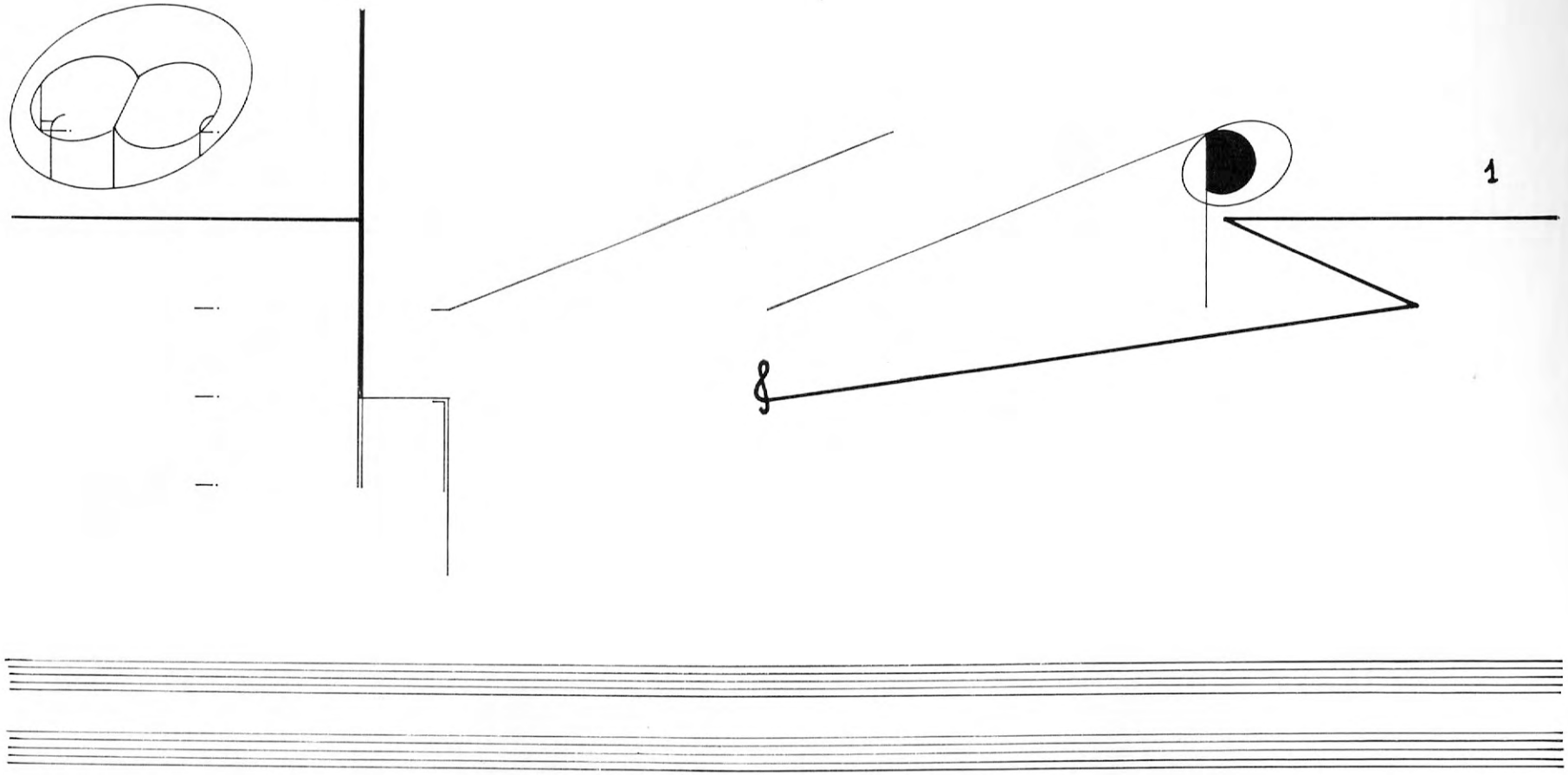
1

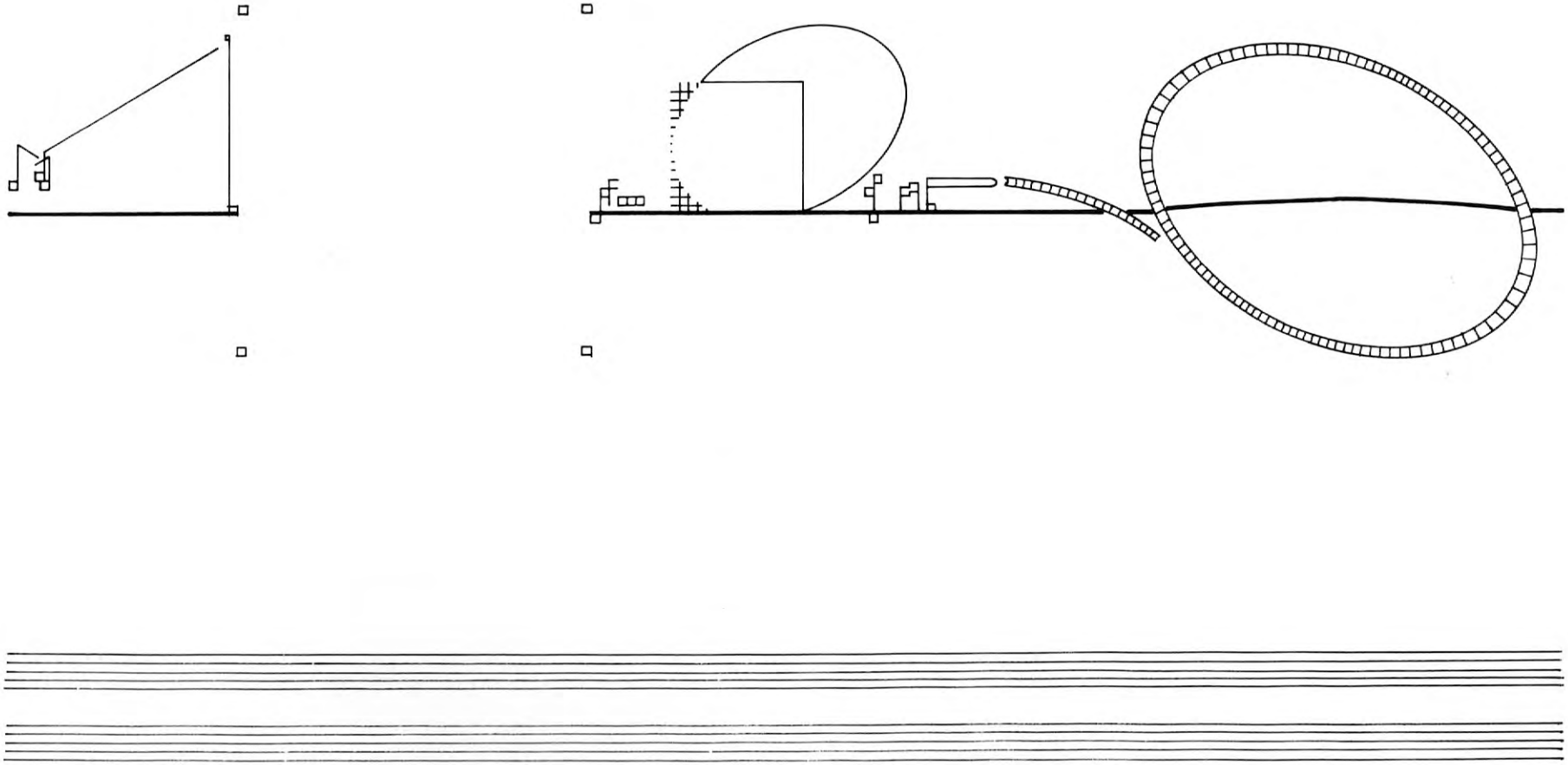

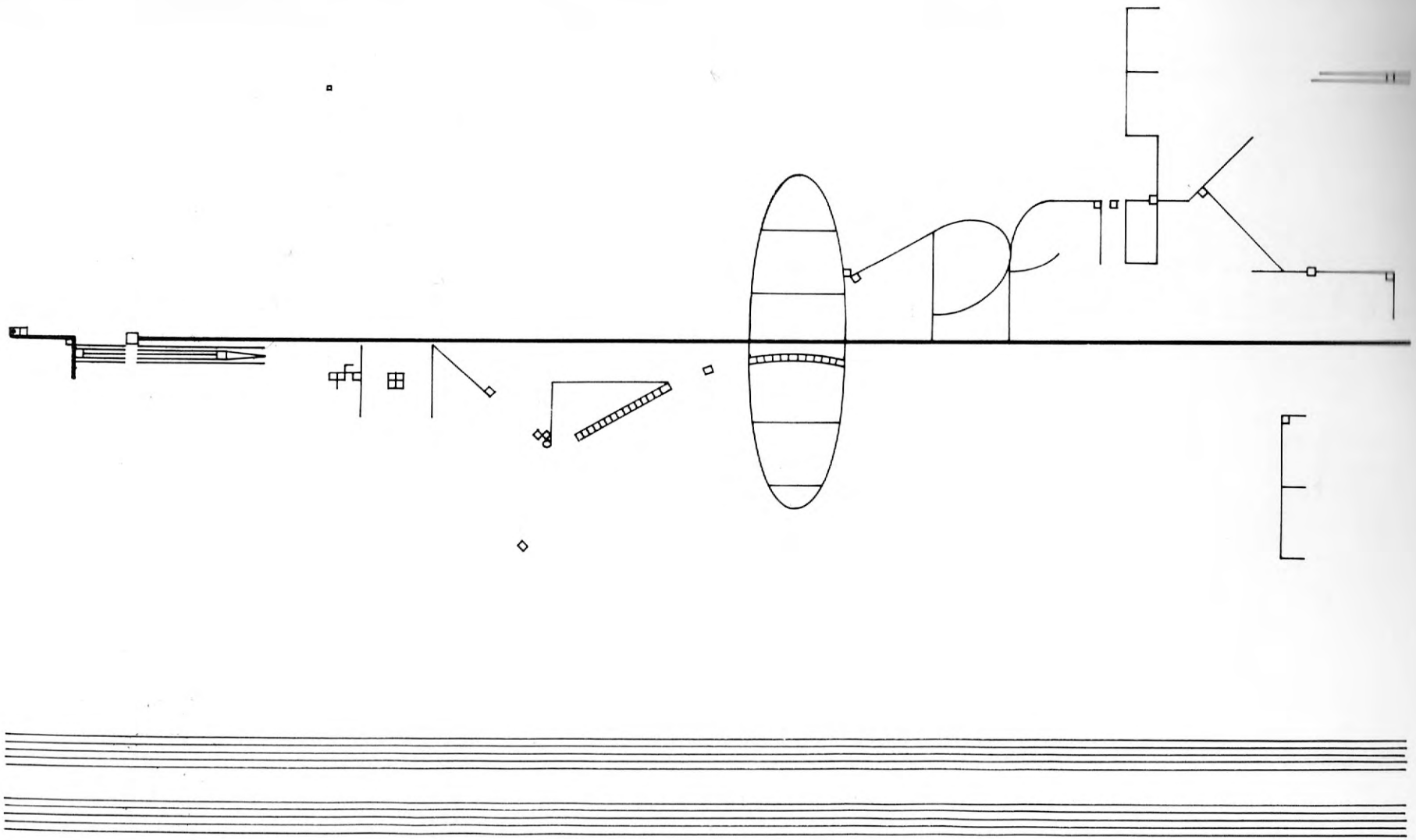

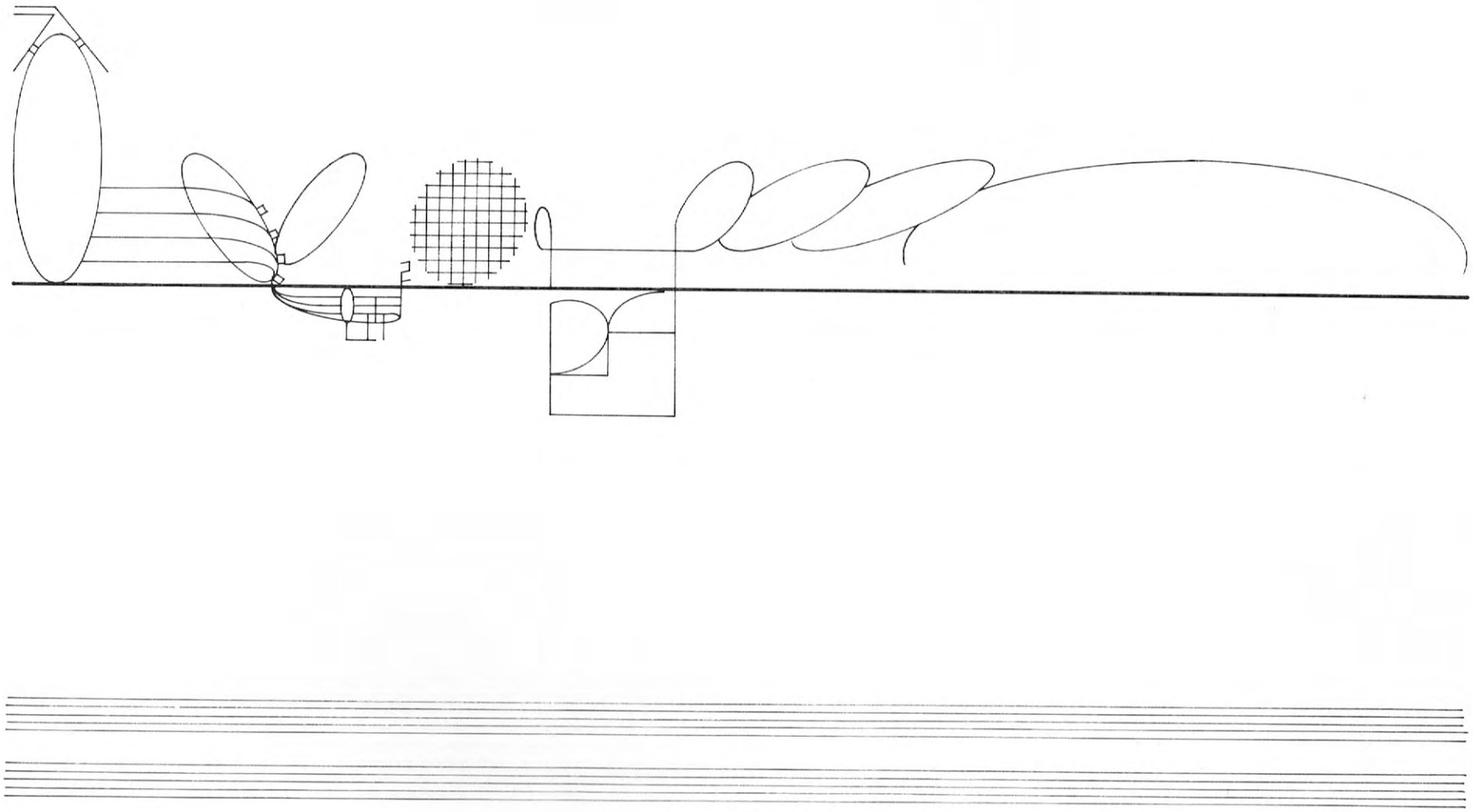

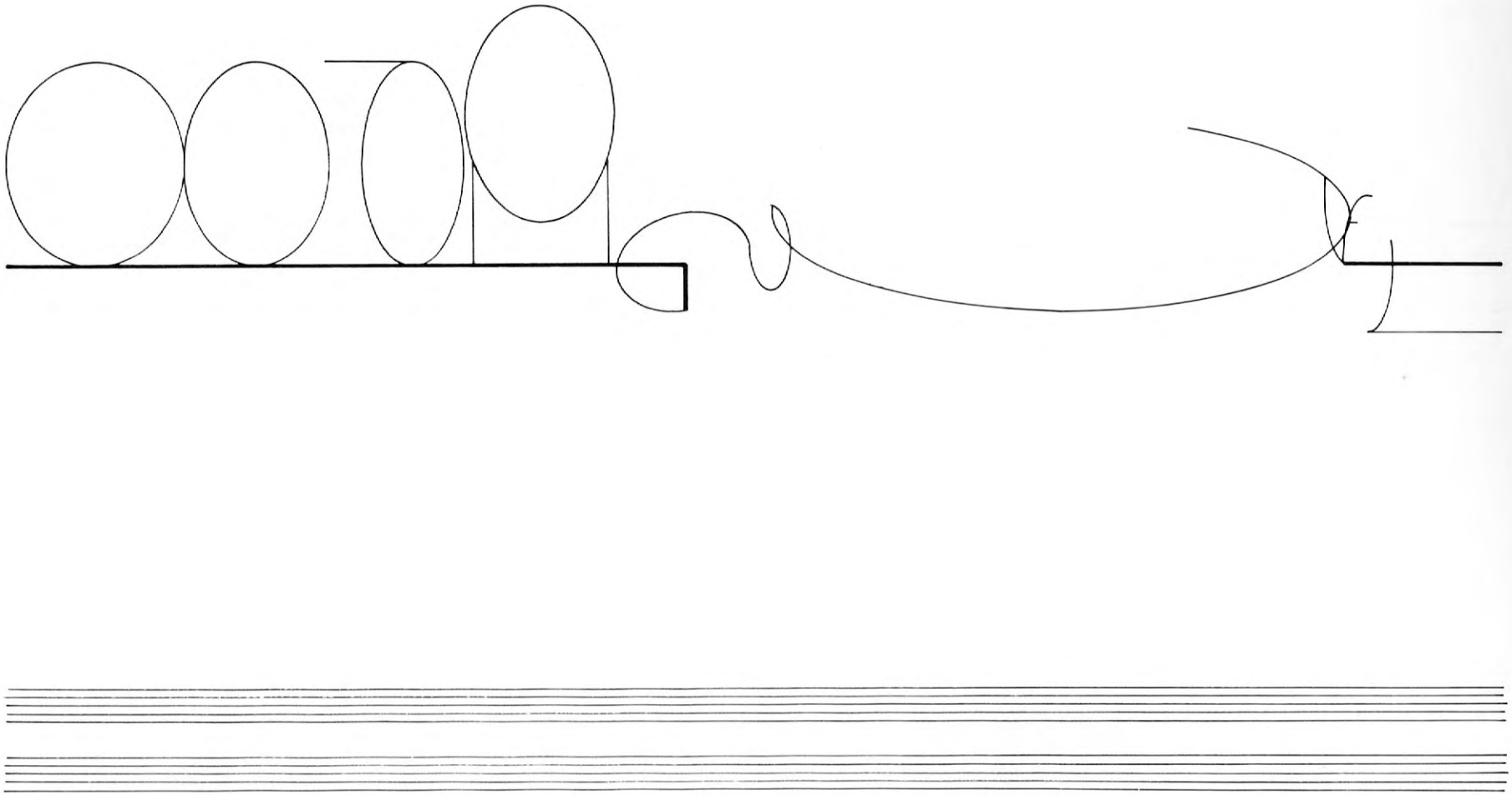

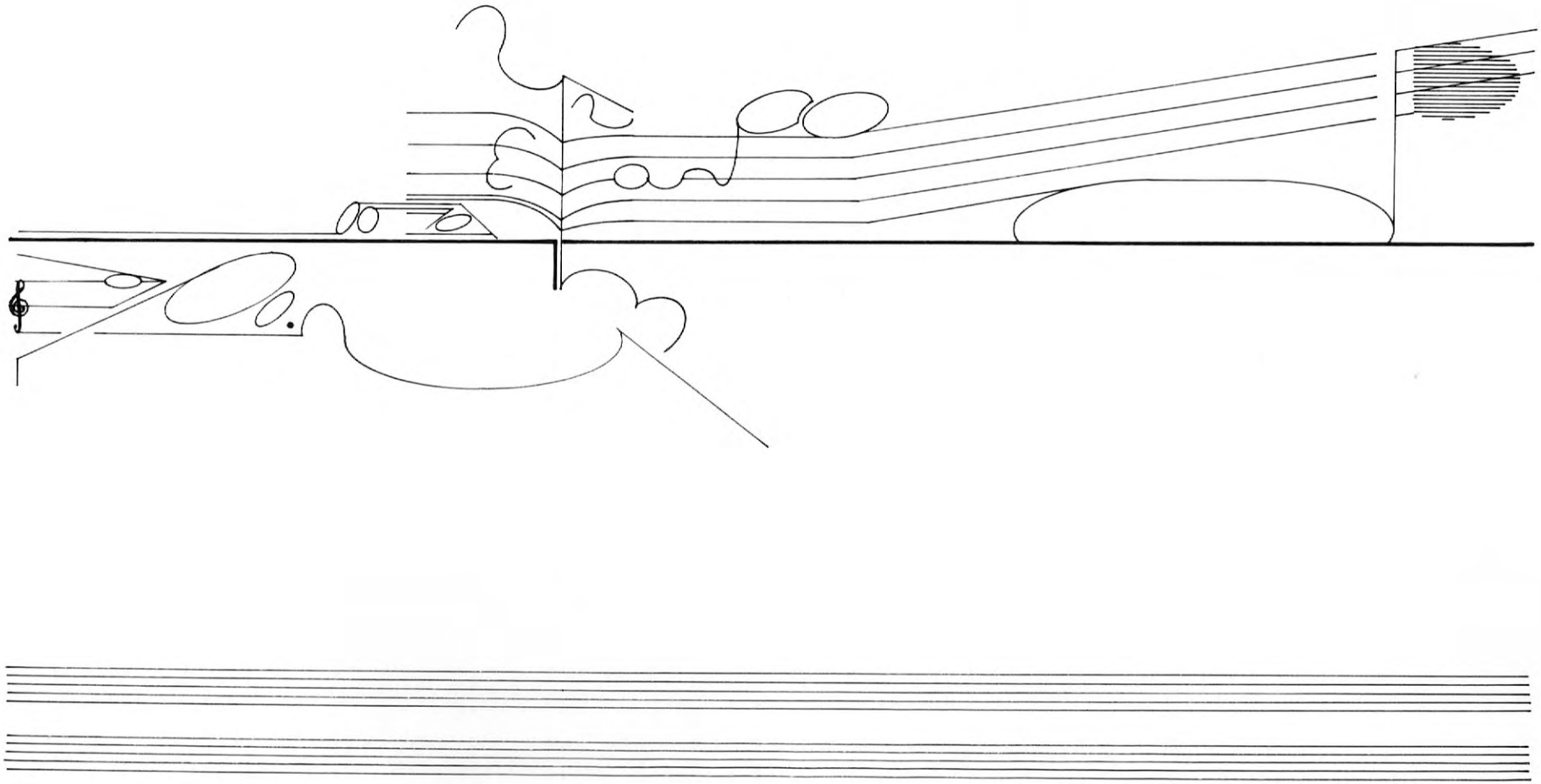

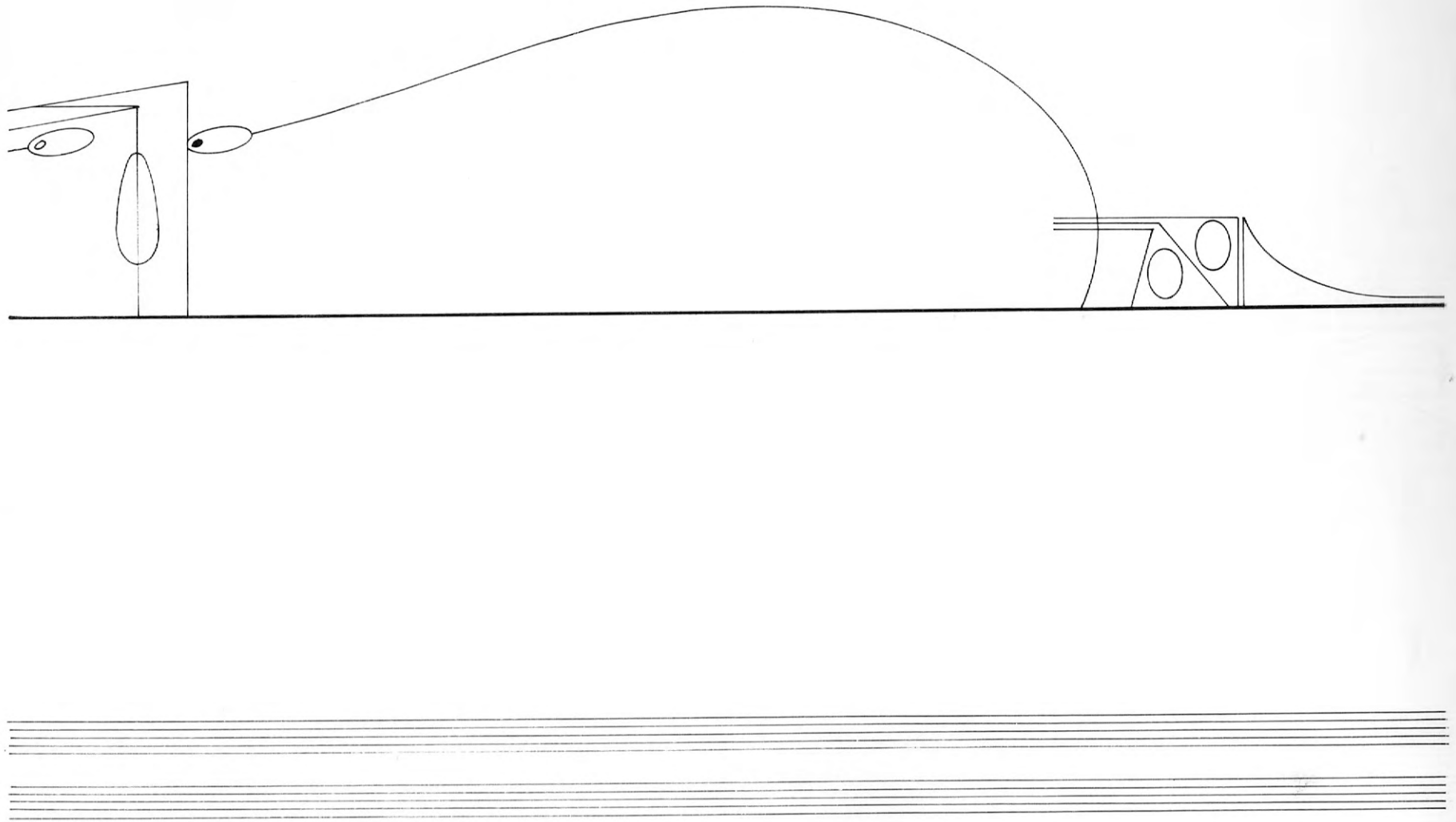

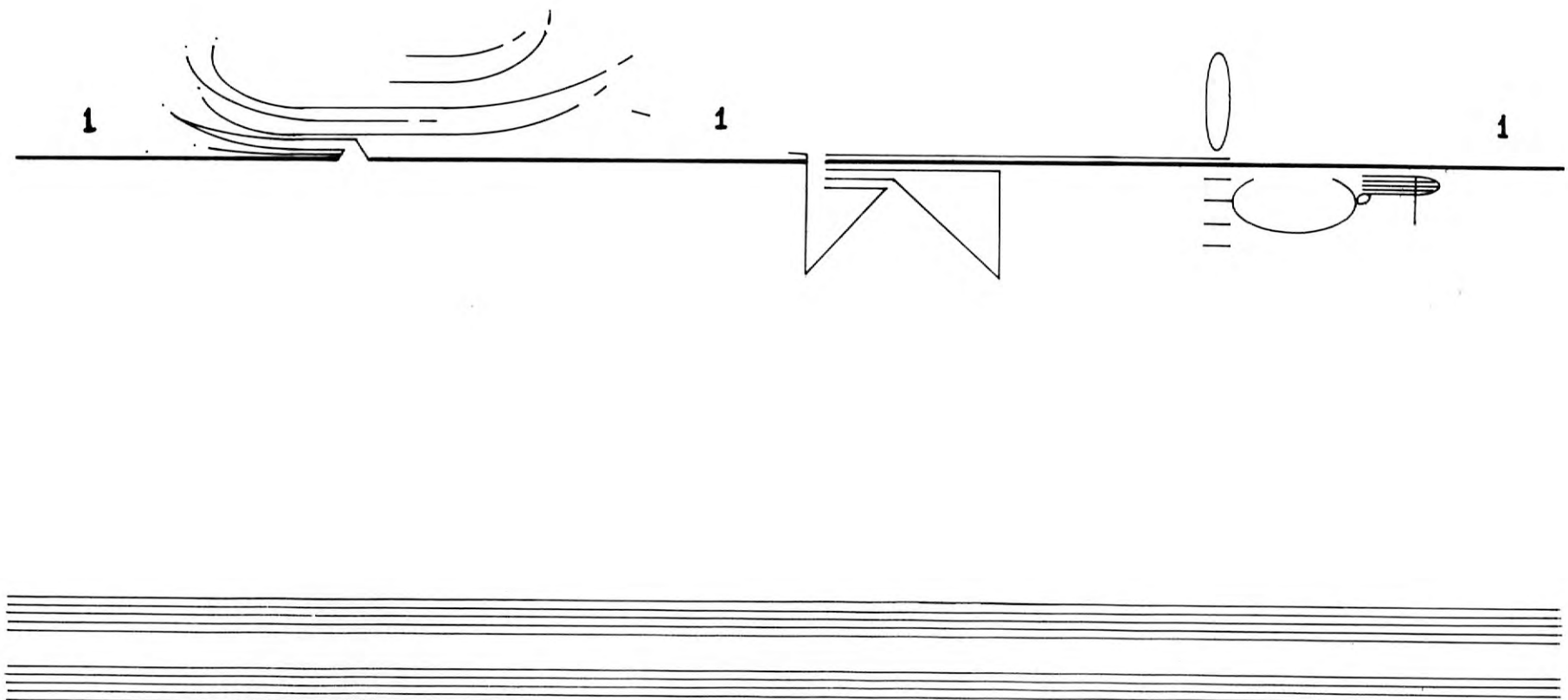
1
1
1

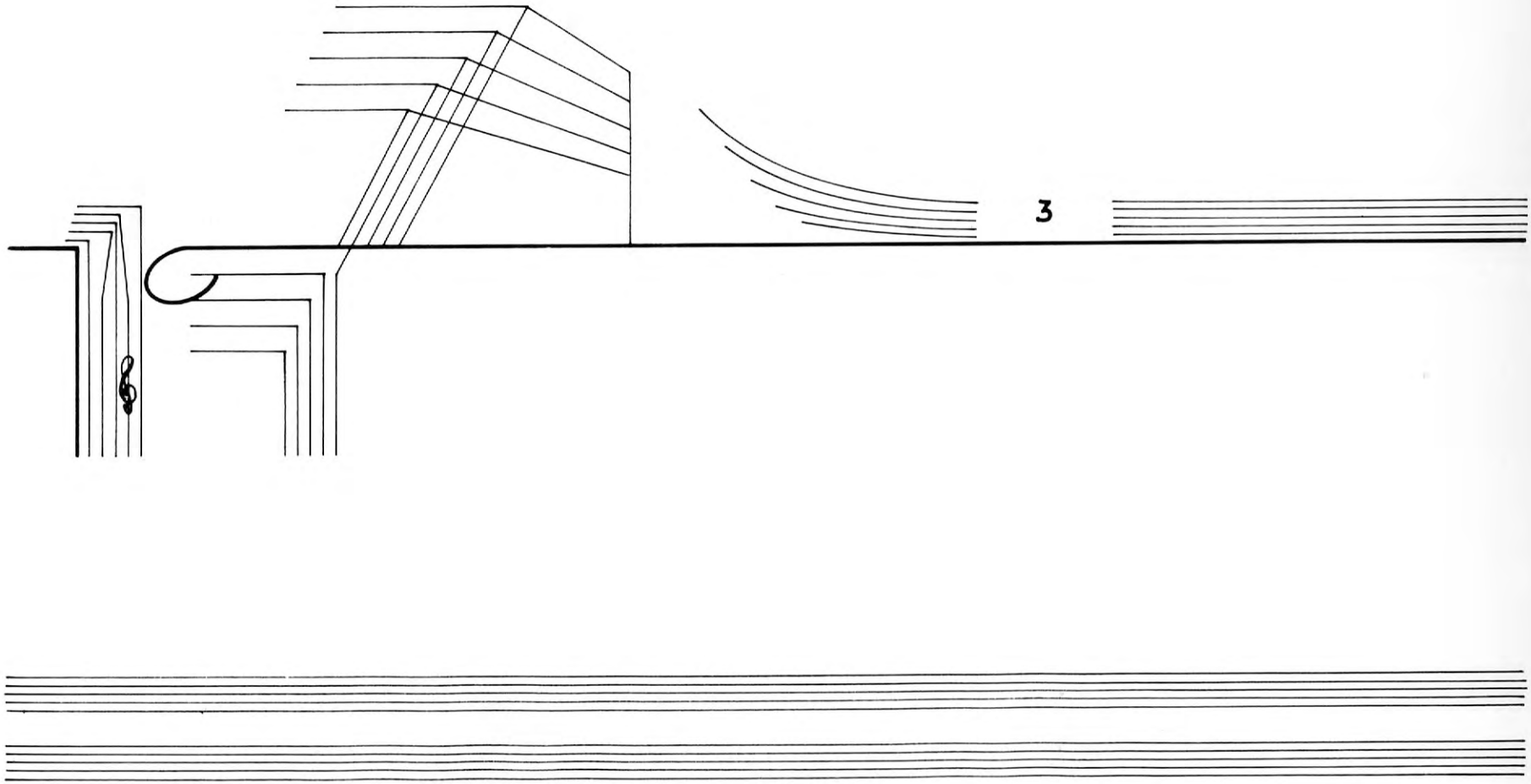
3

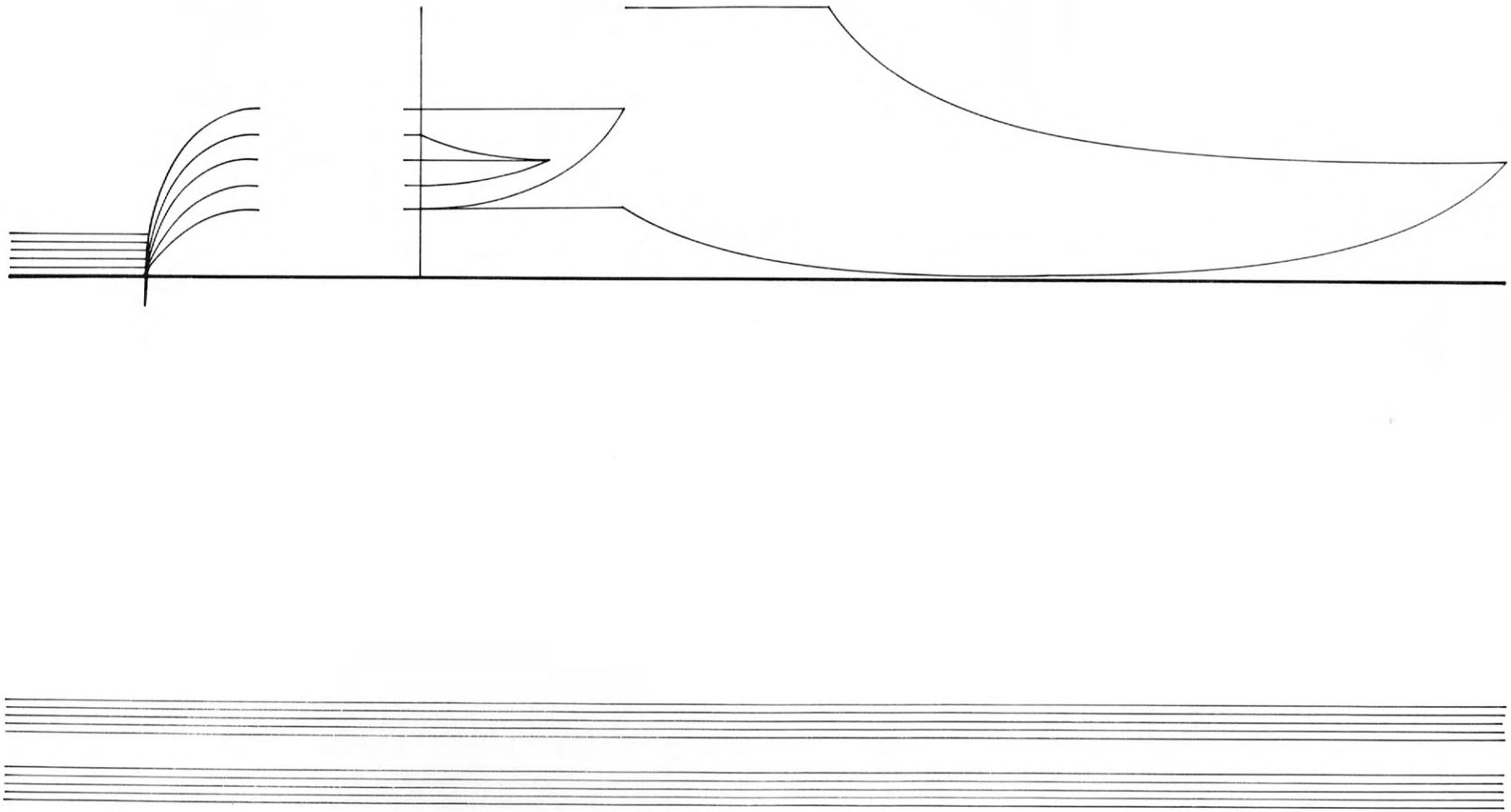

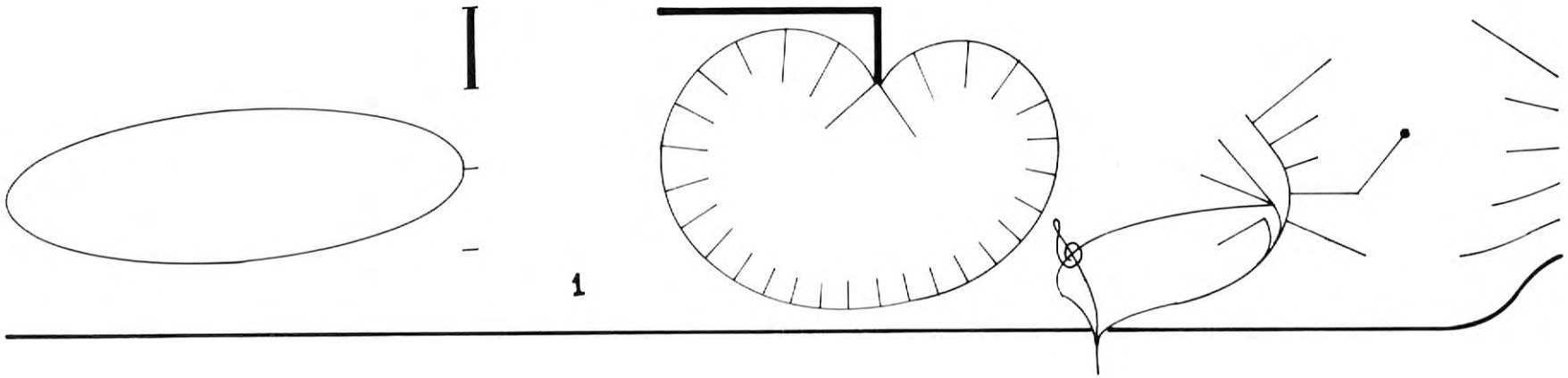
1

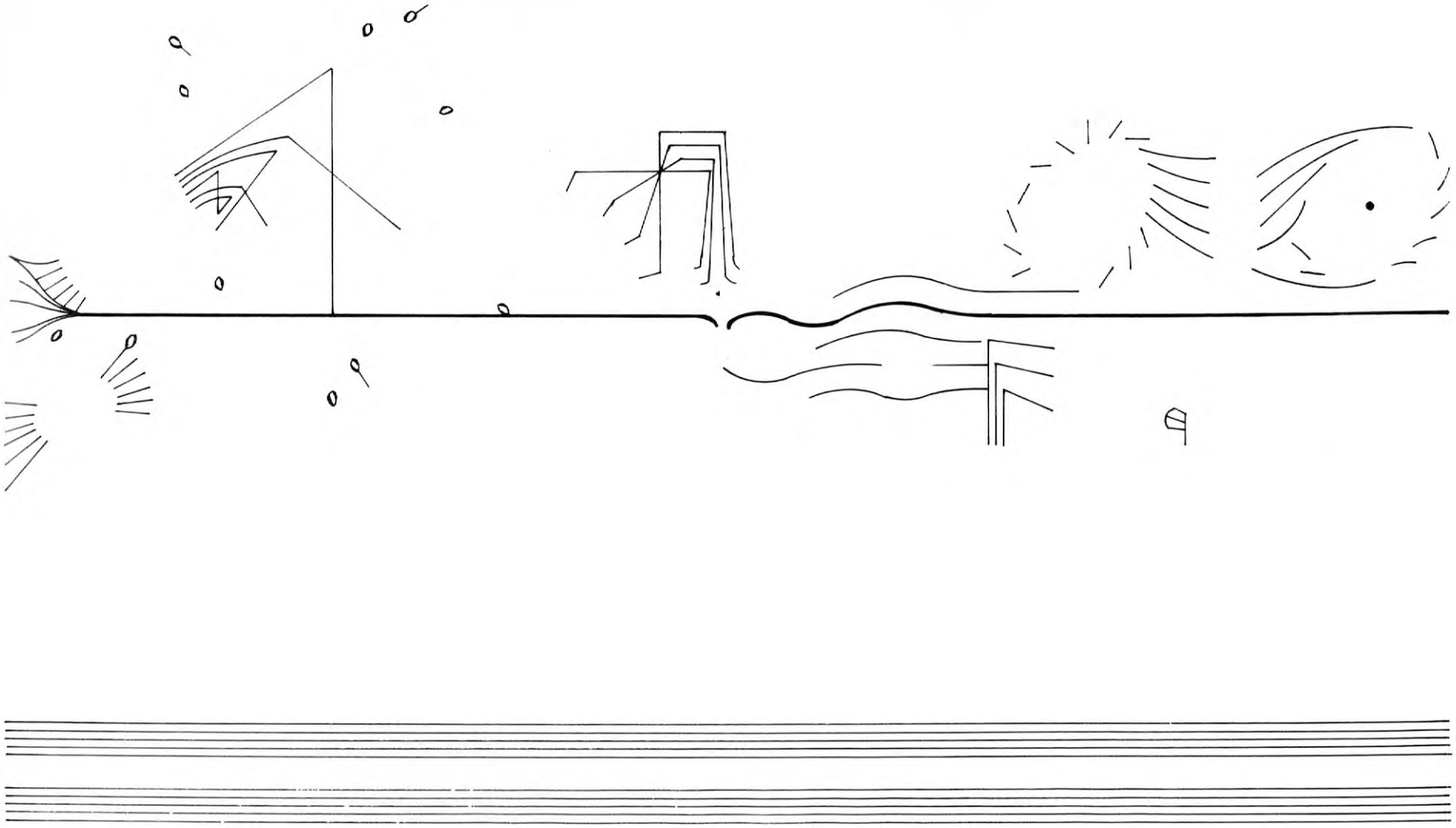

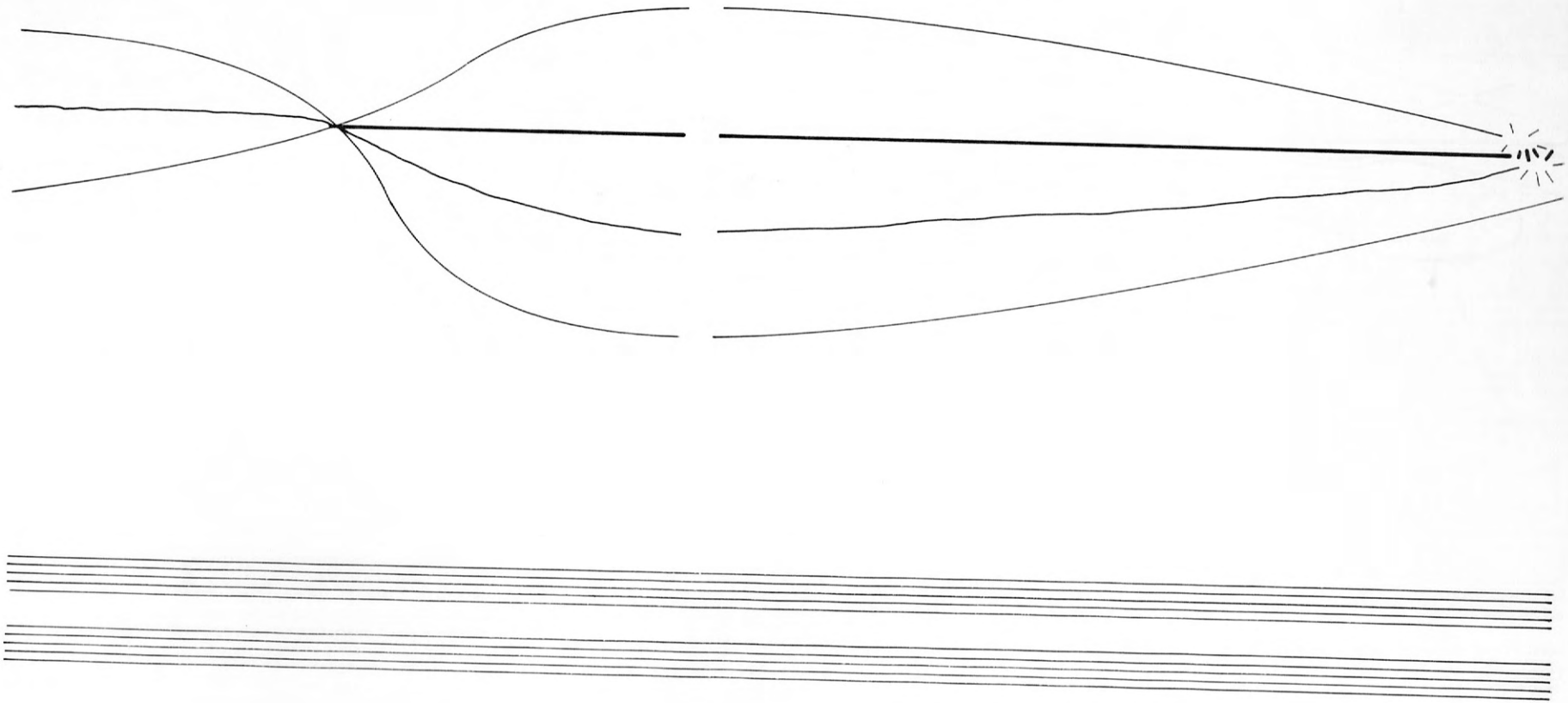

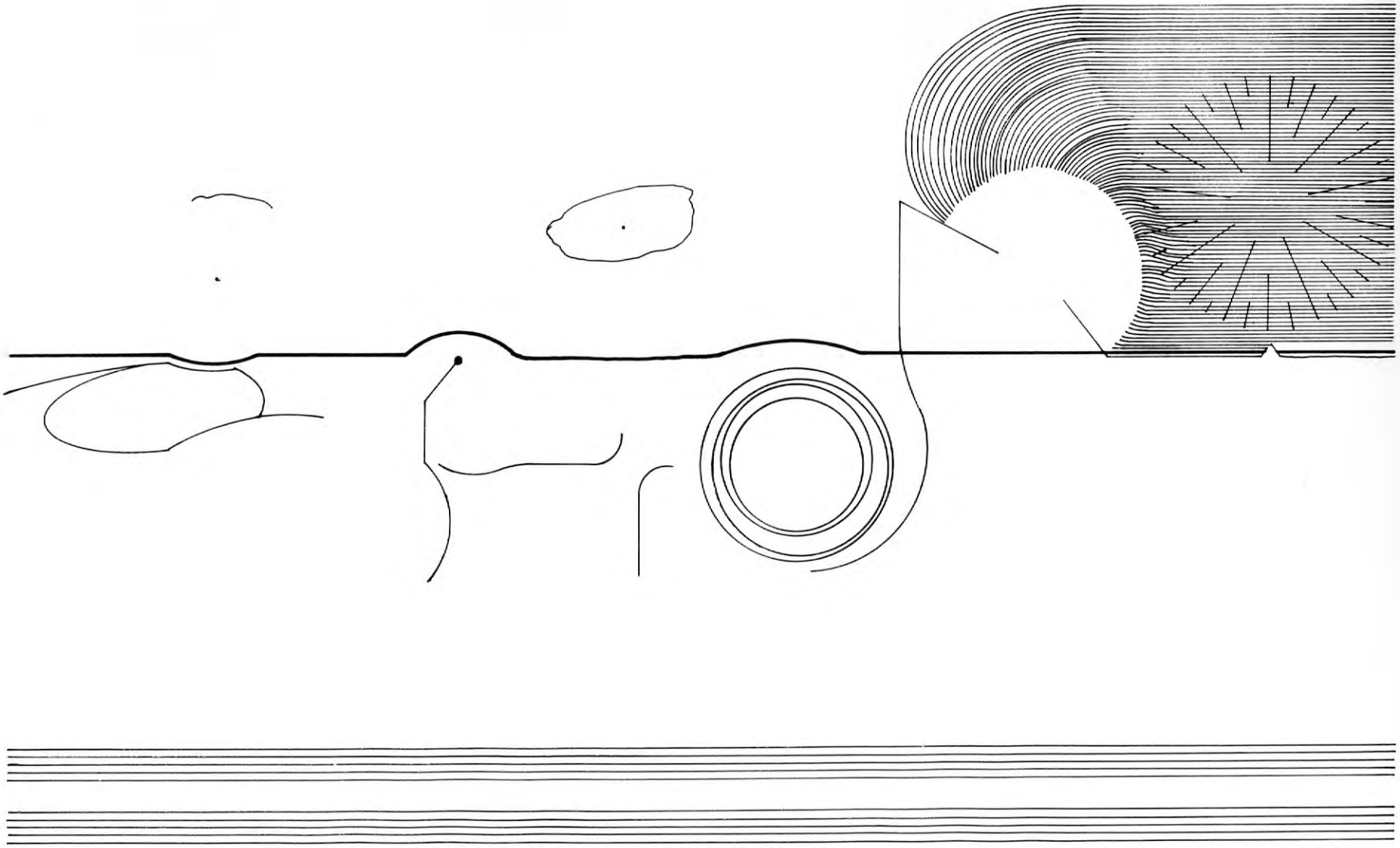

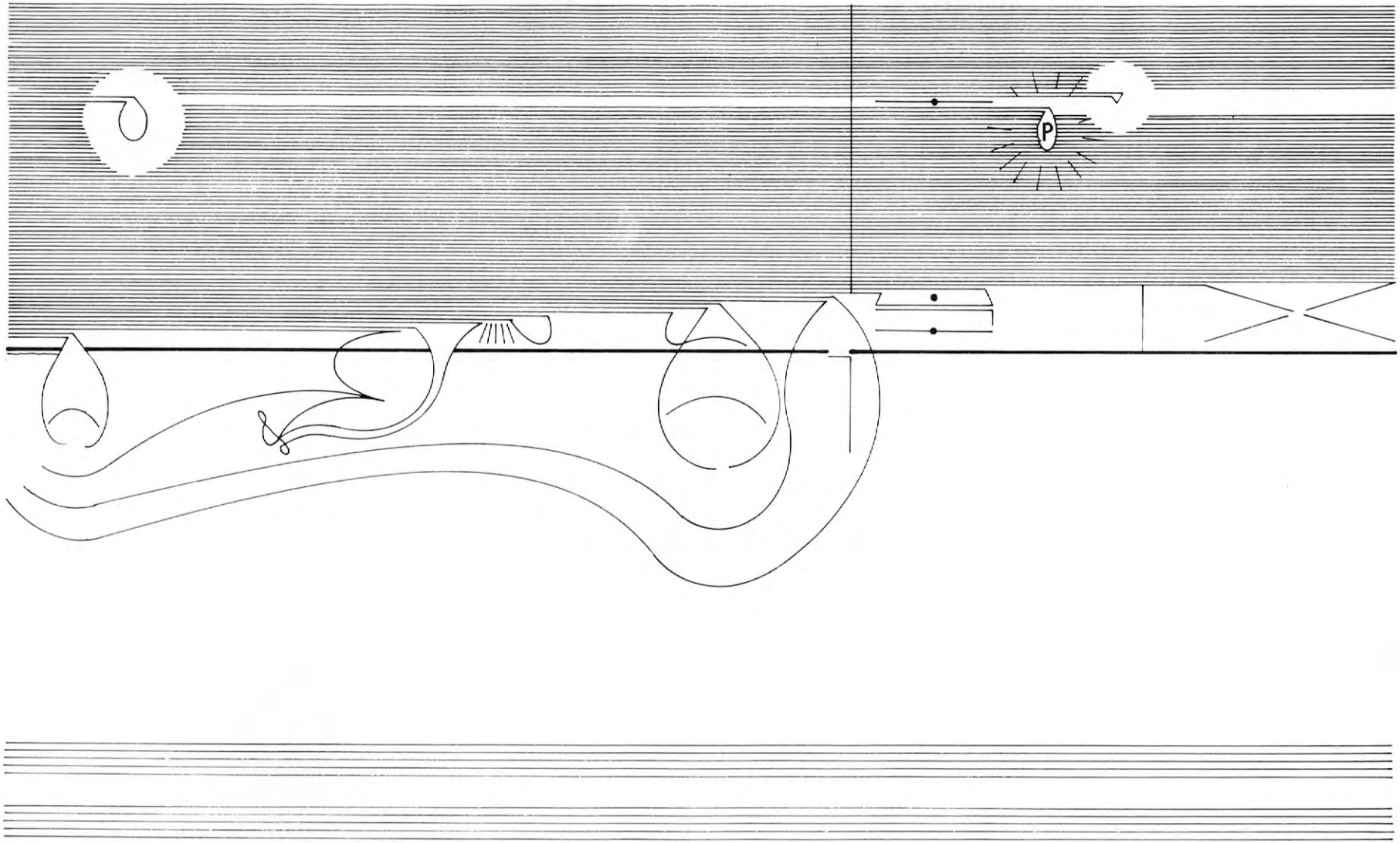
P

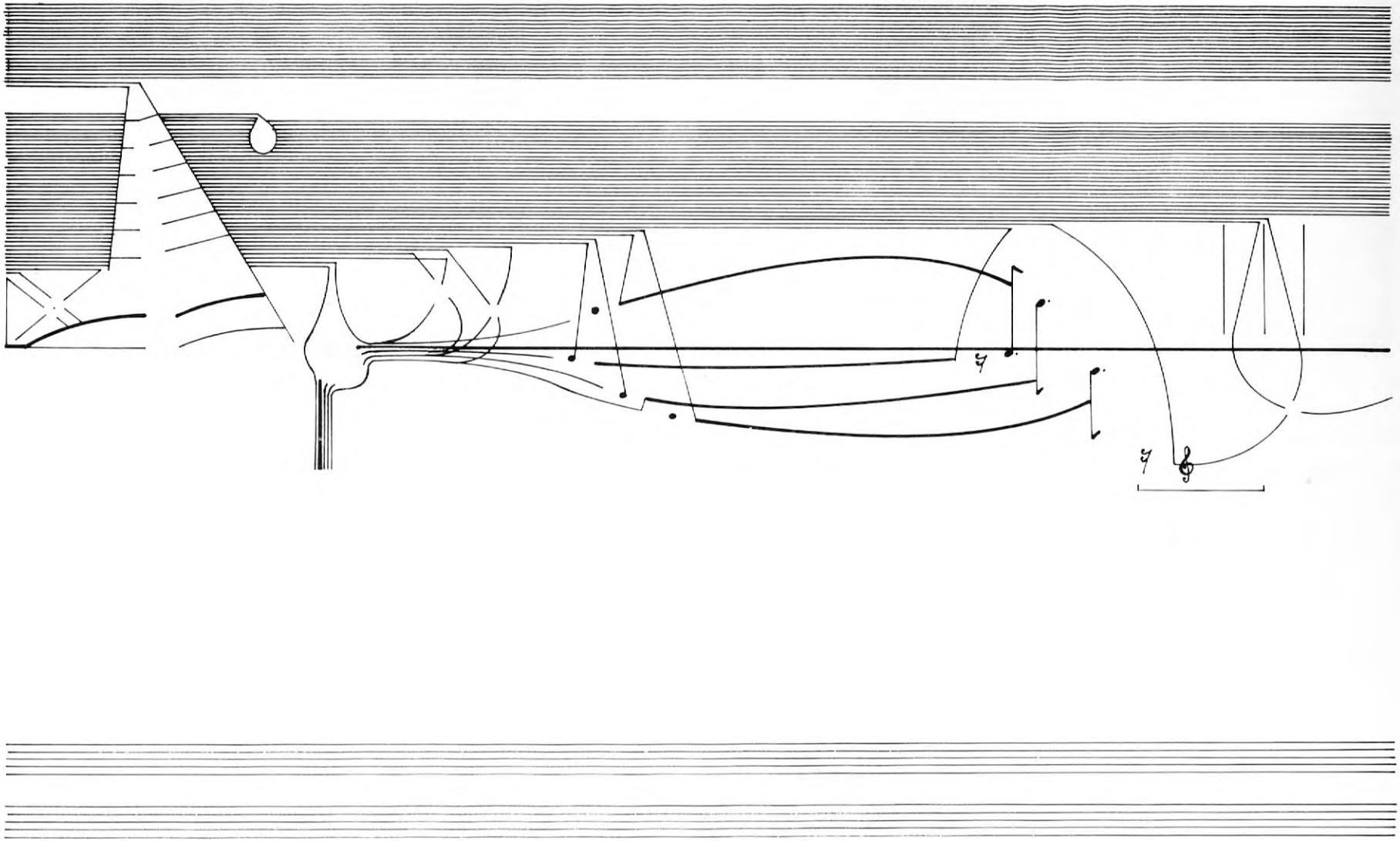

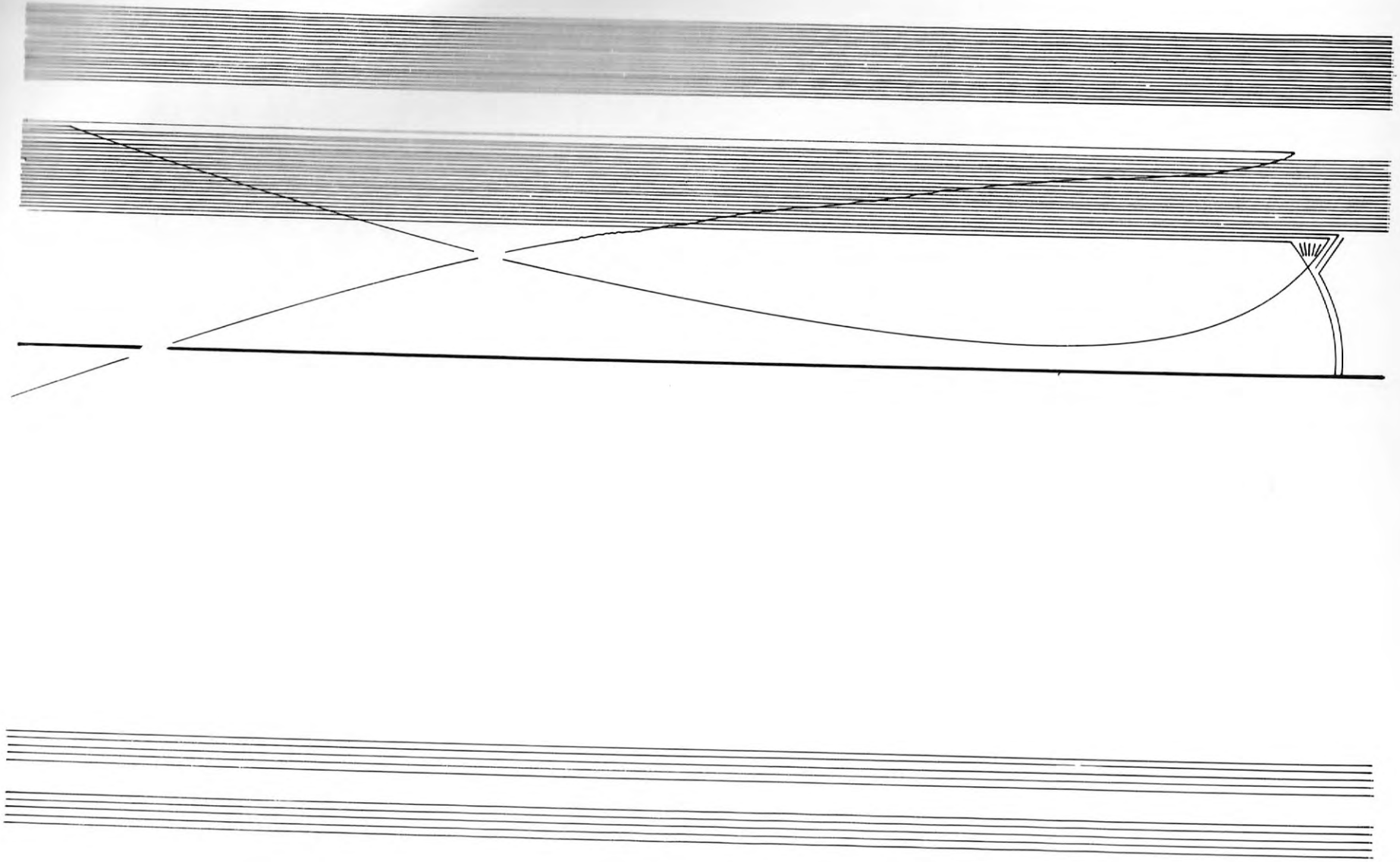

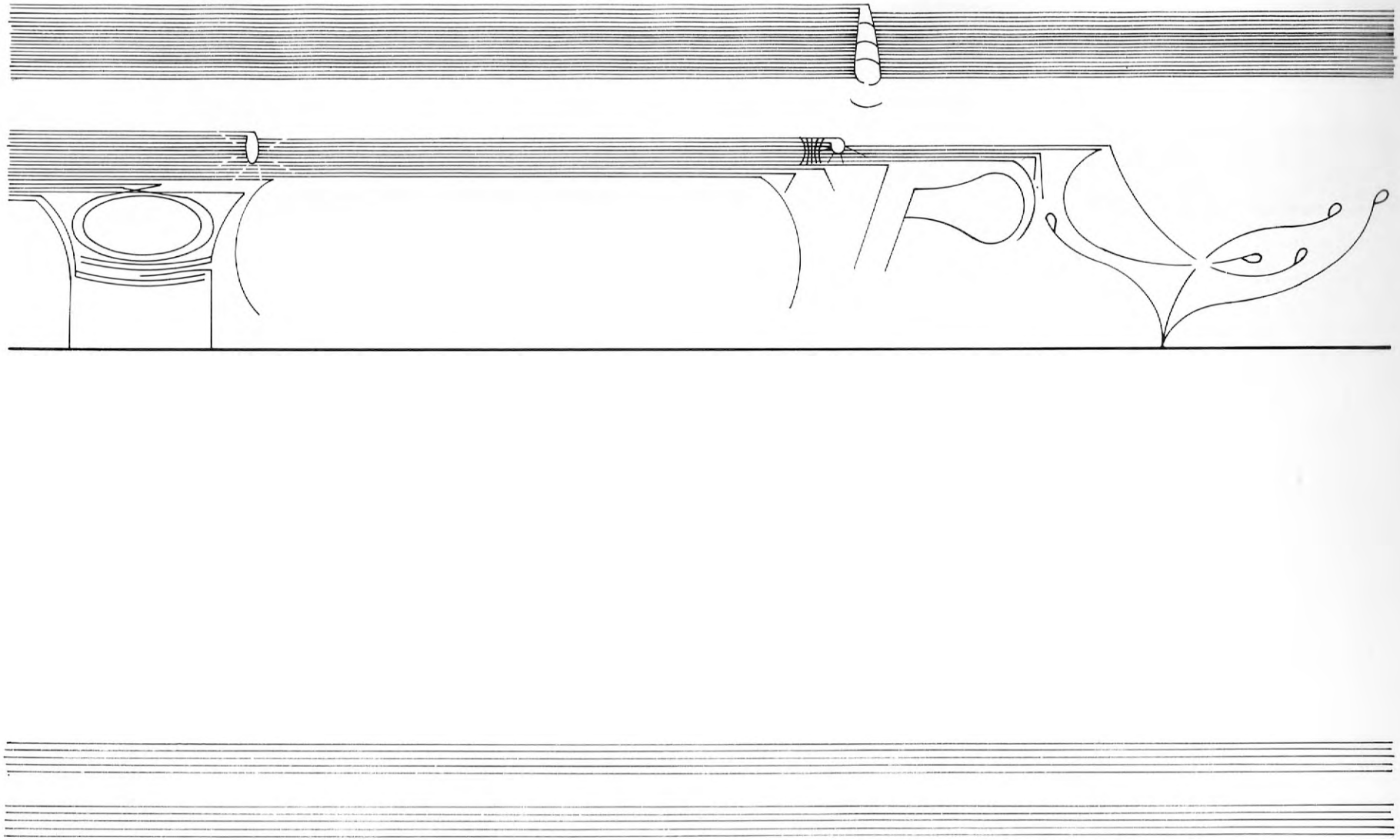

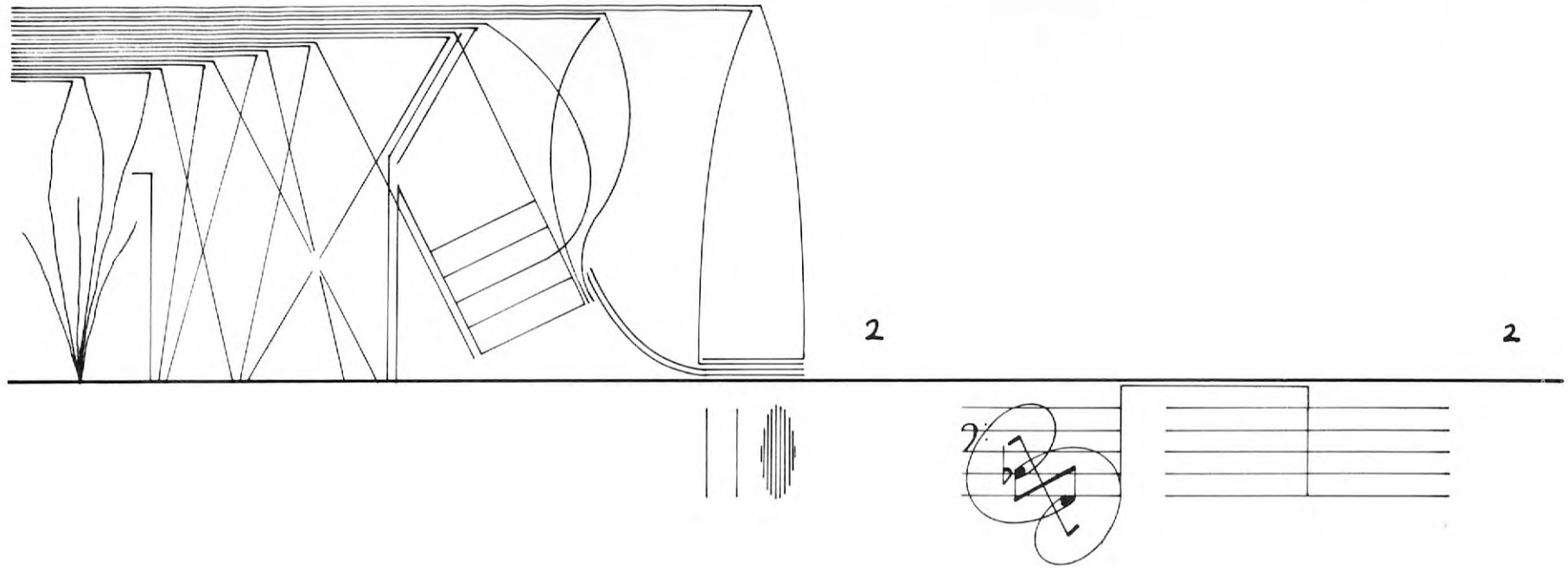
2
2
2

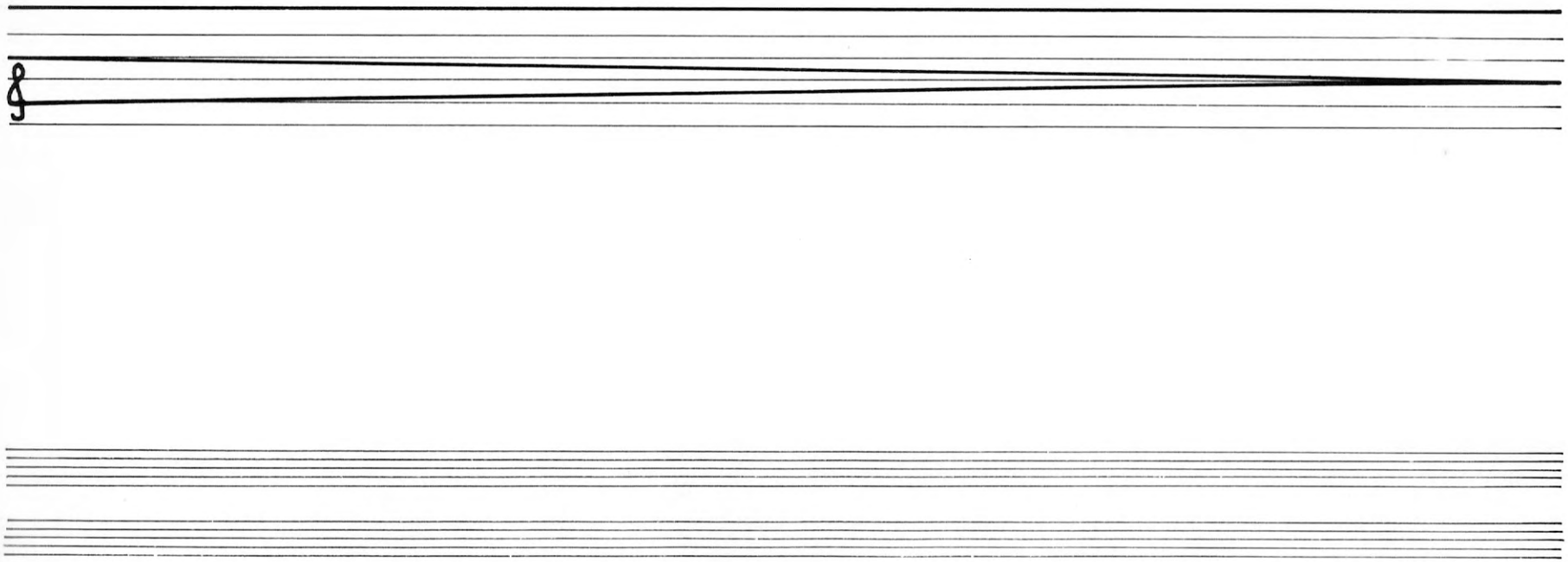

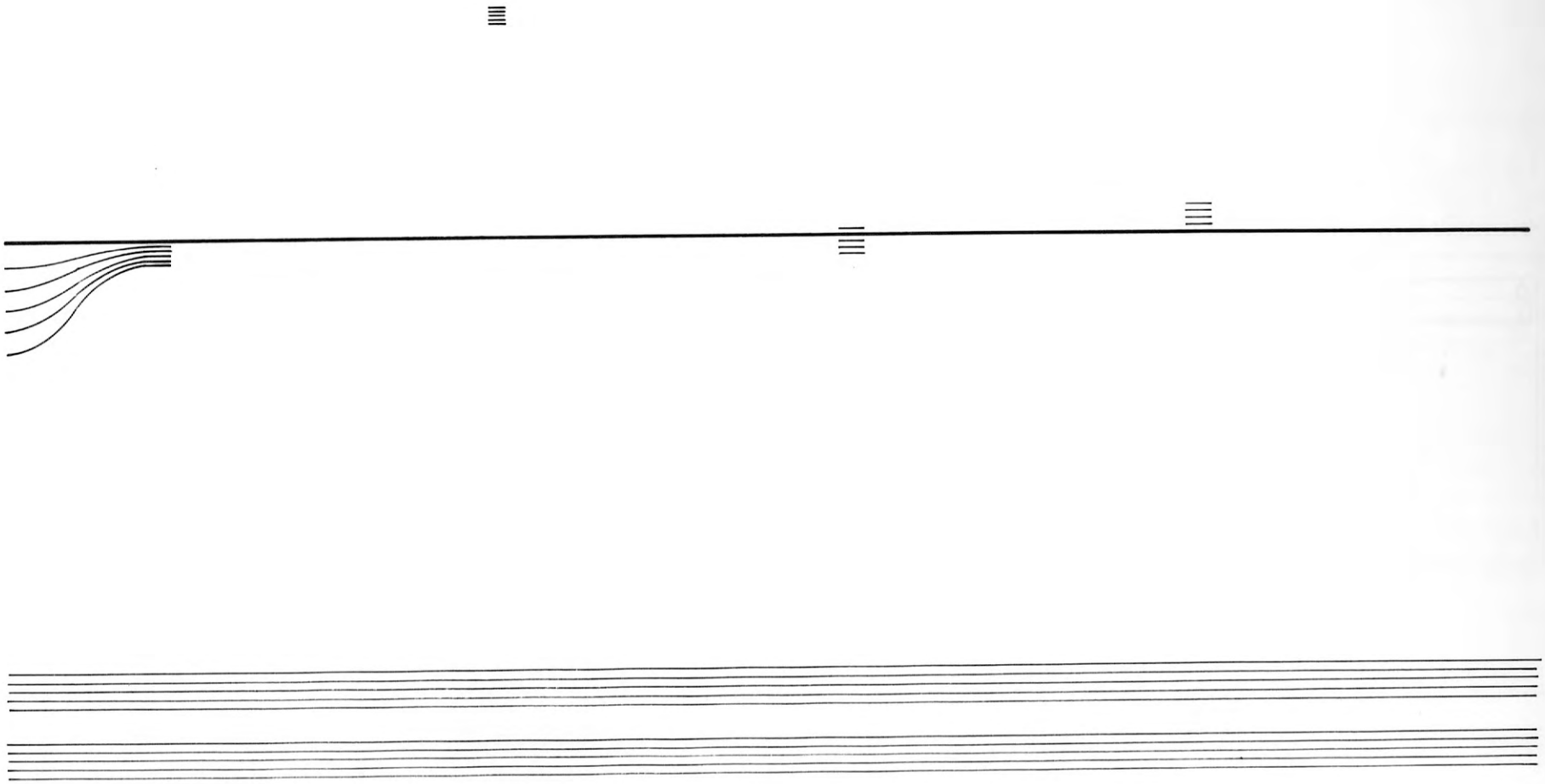

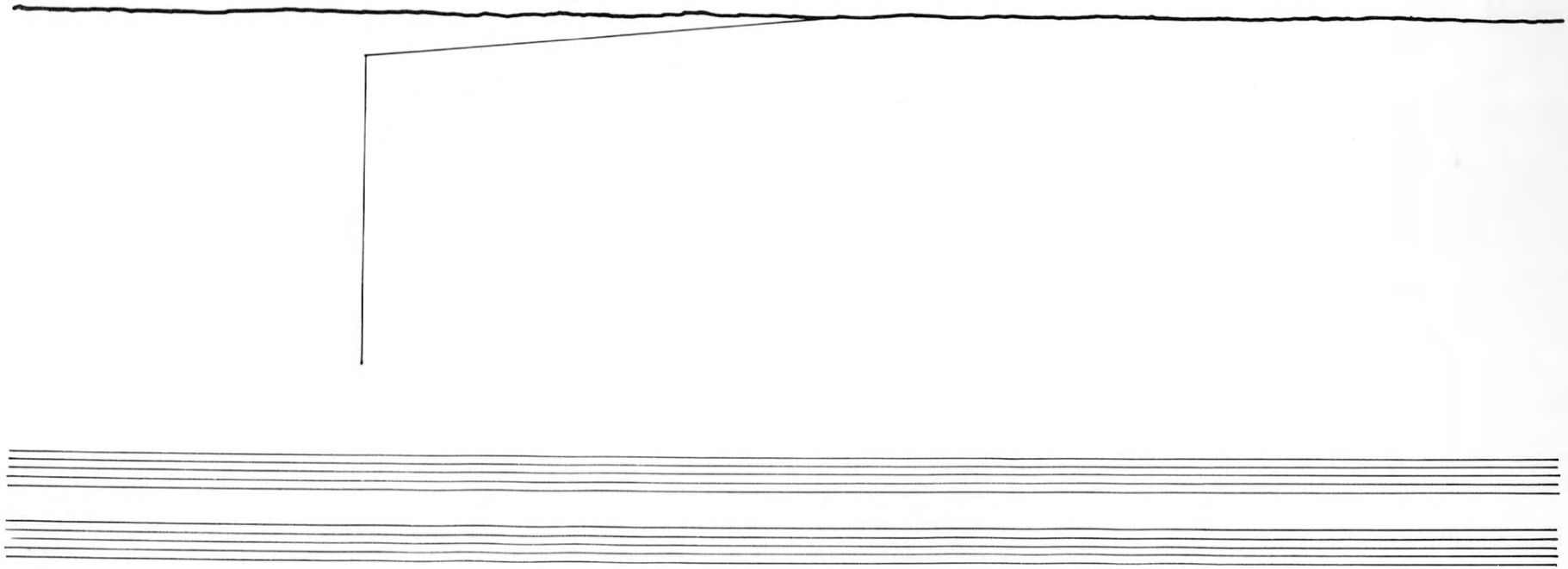

172

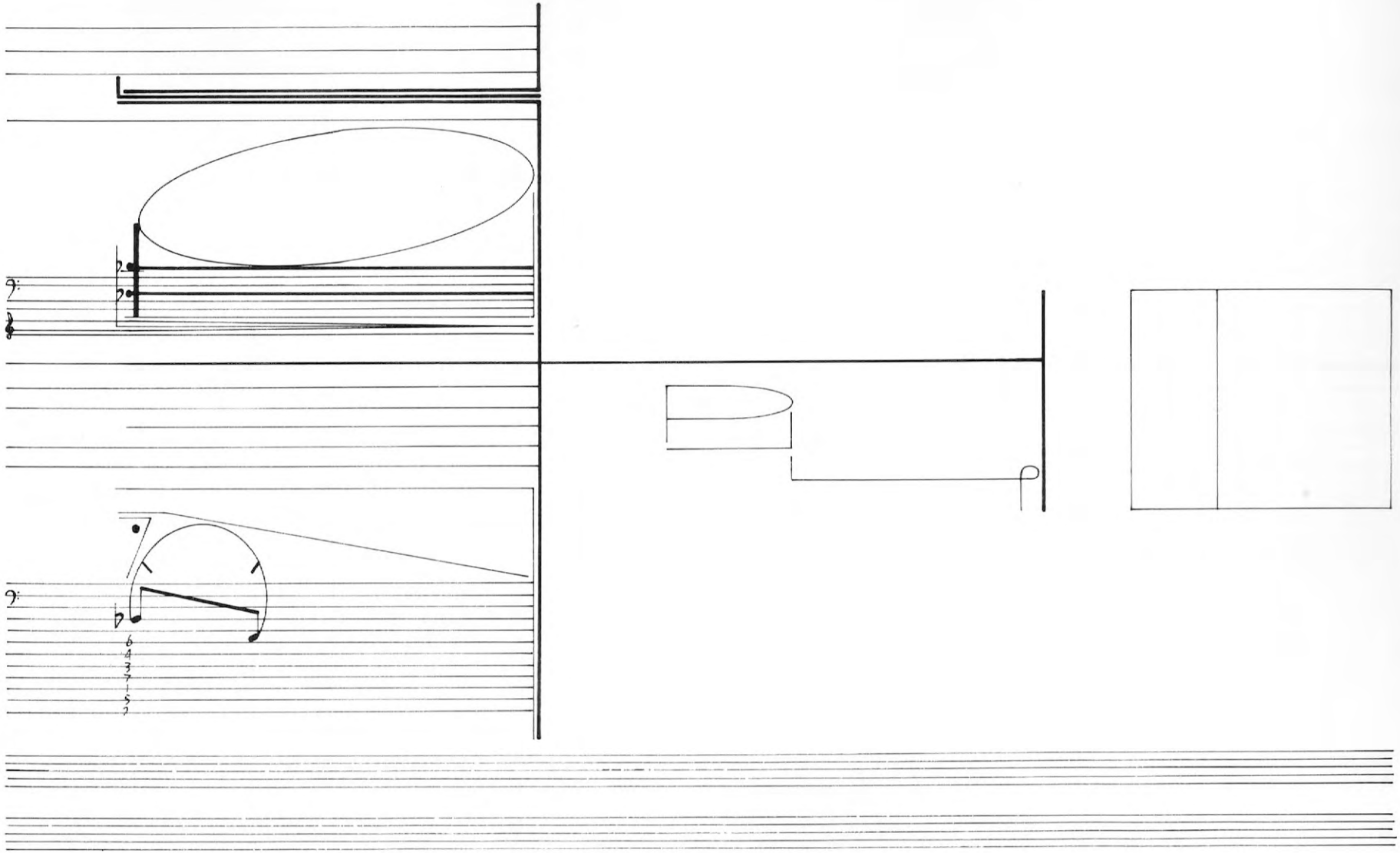

174

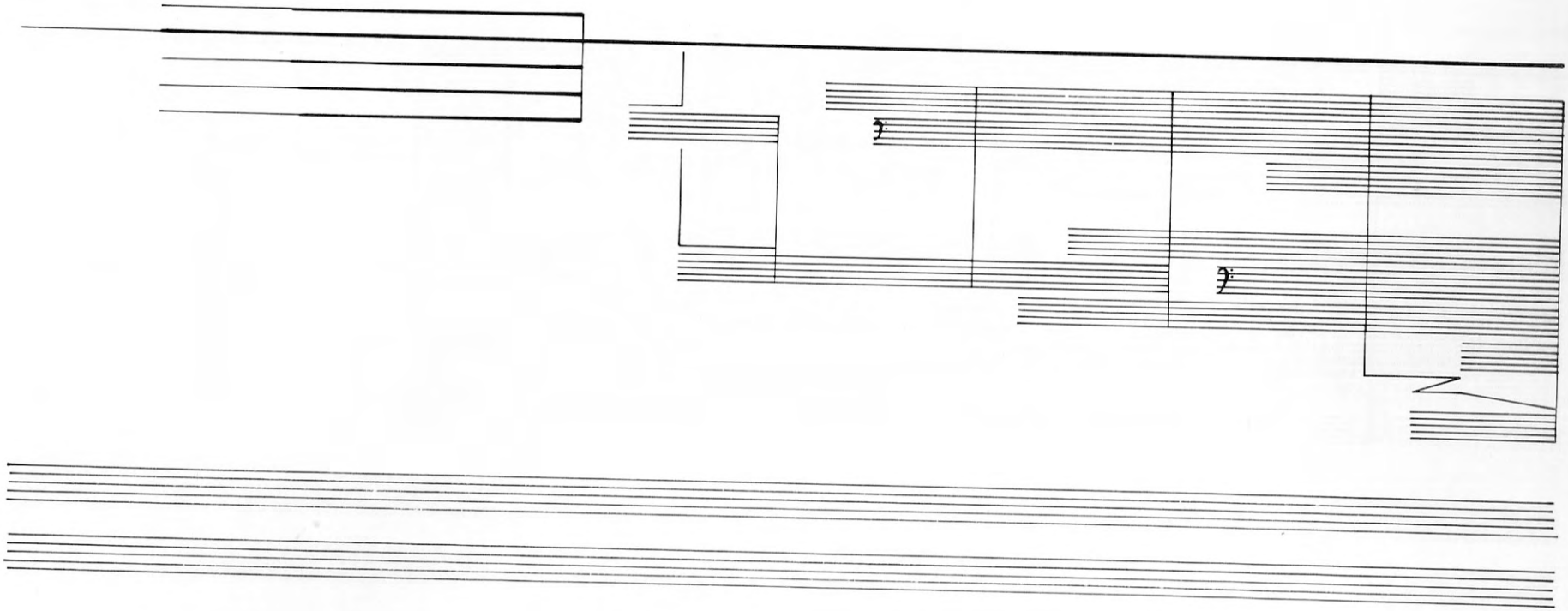

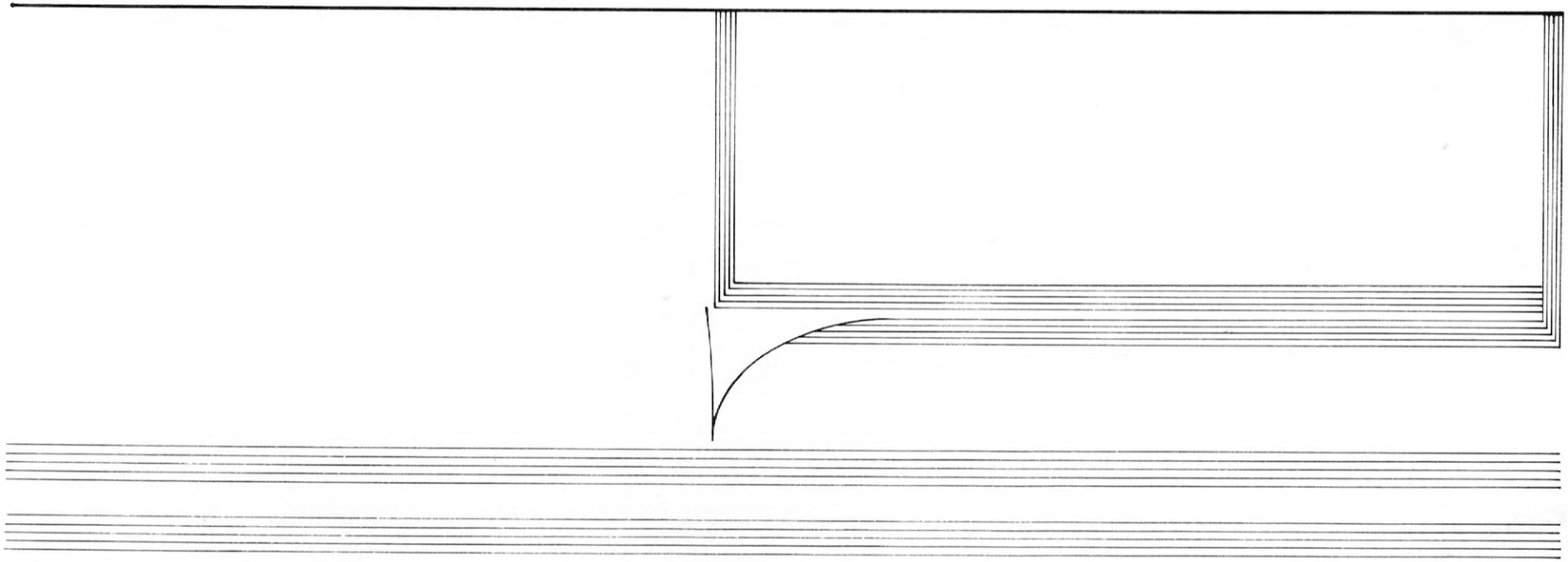

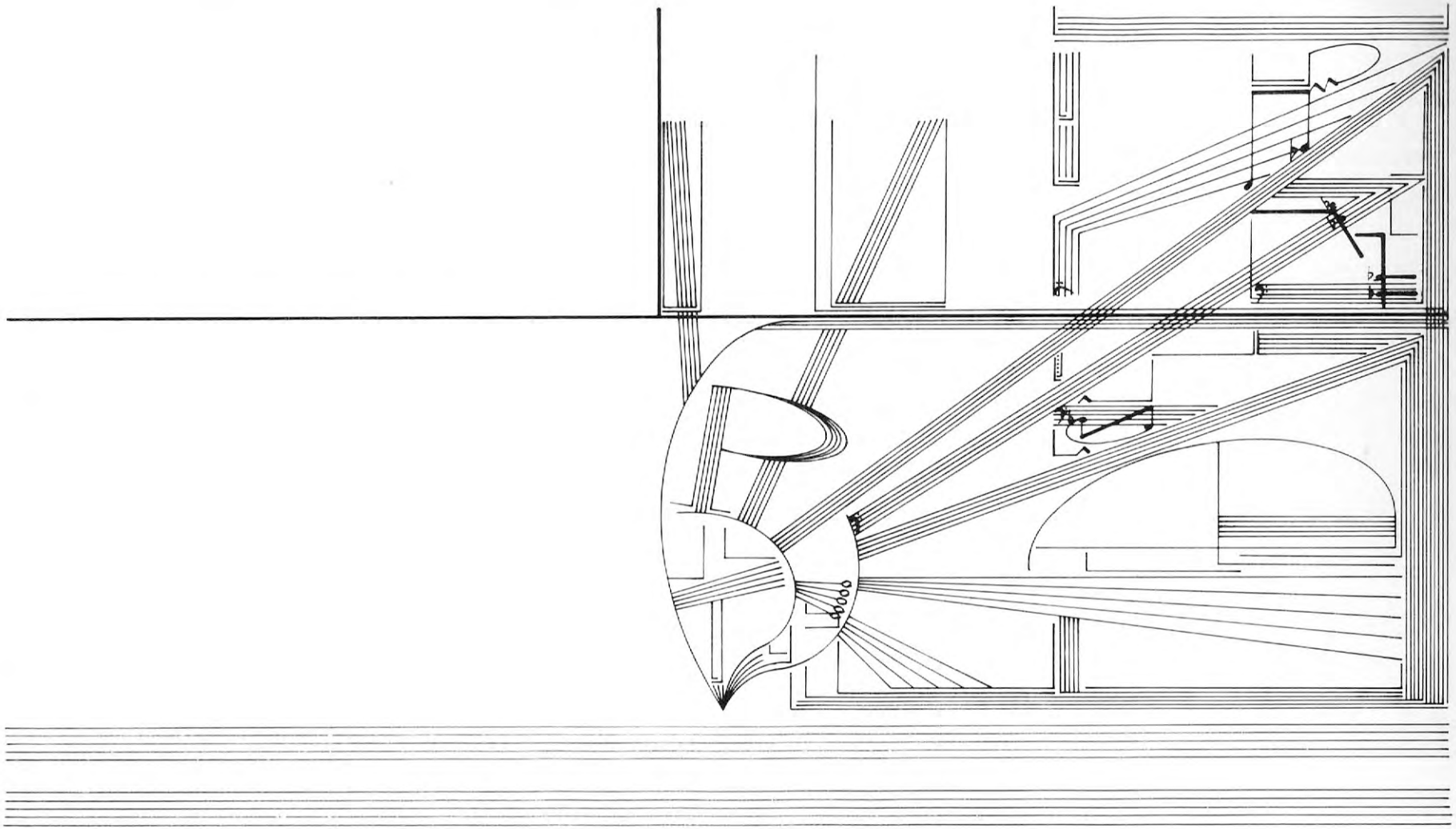

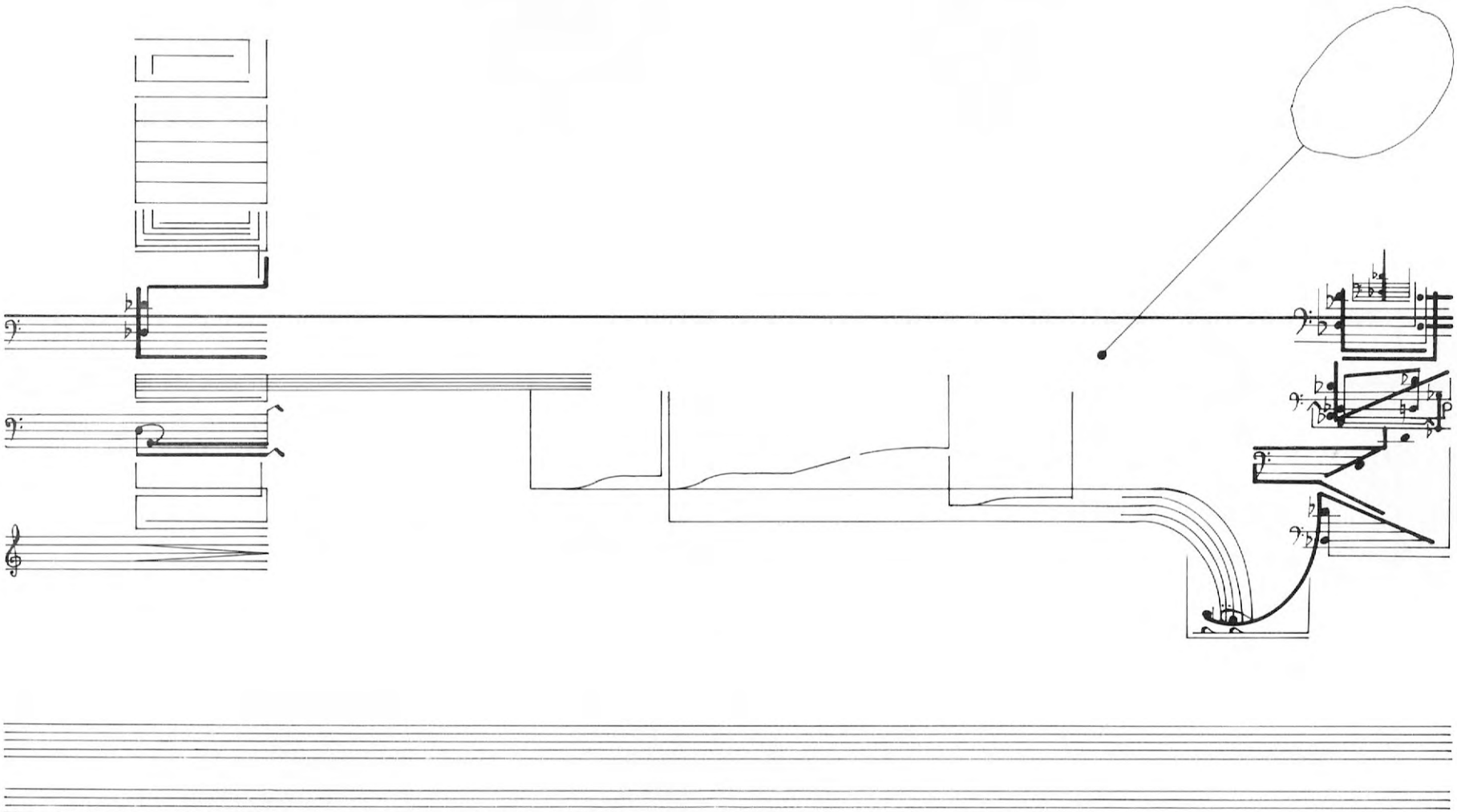

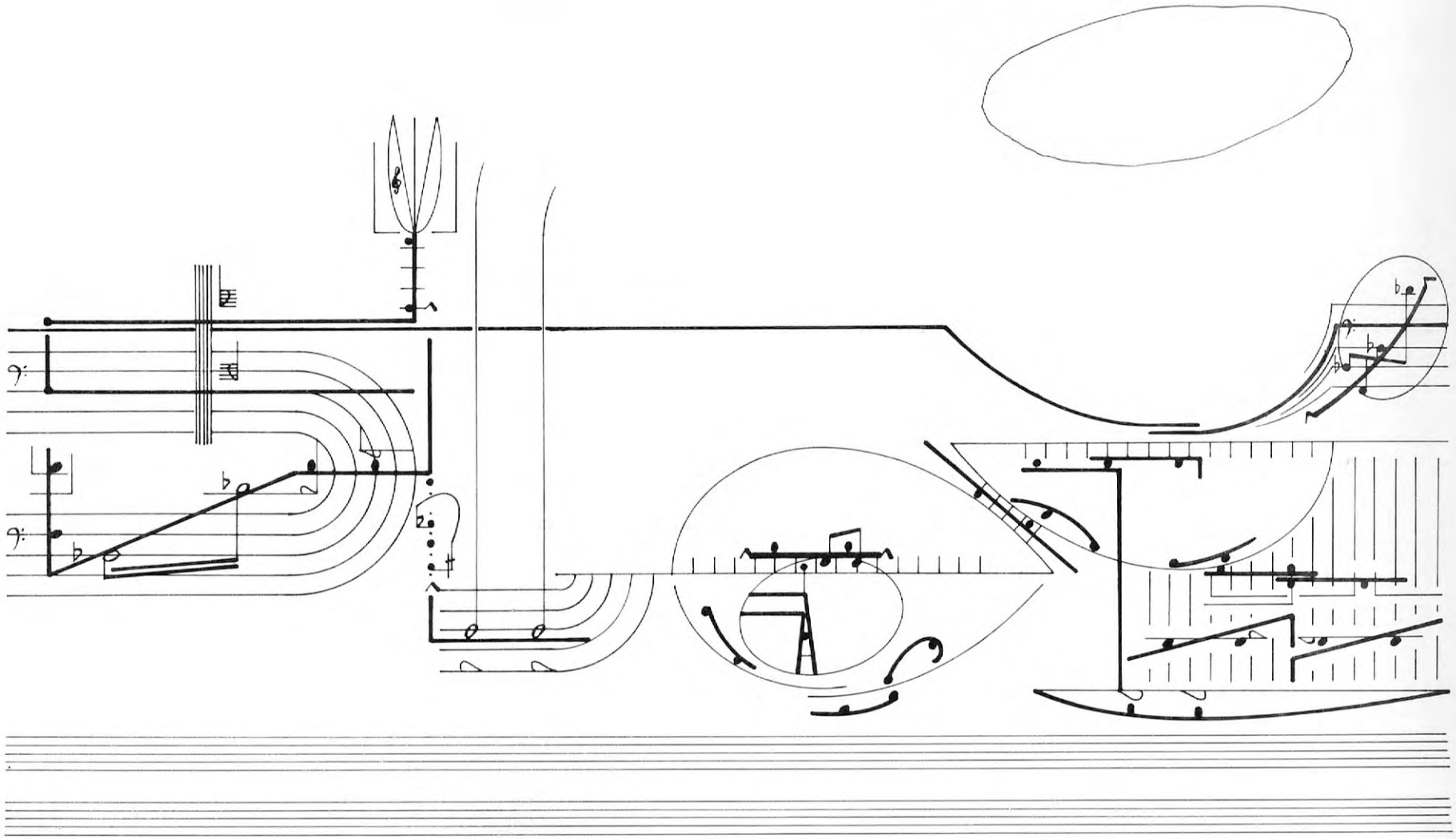

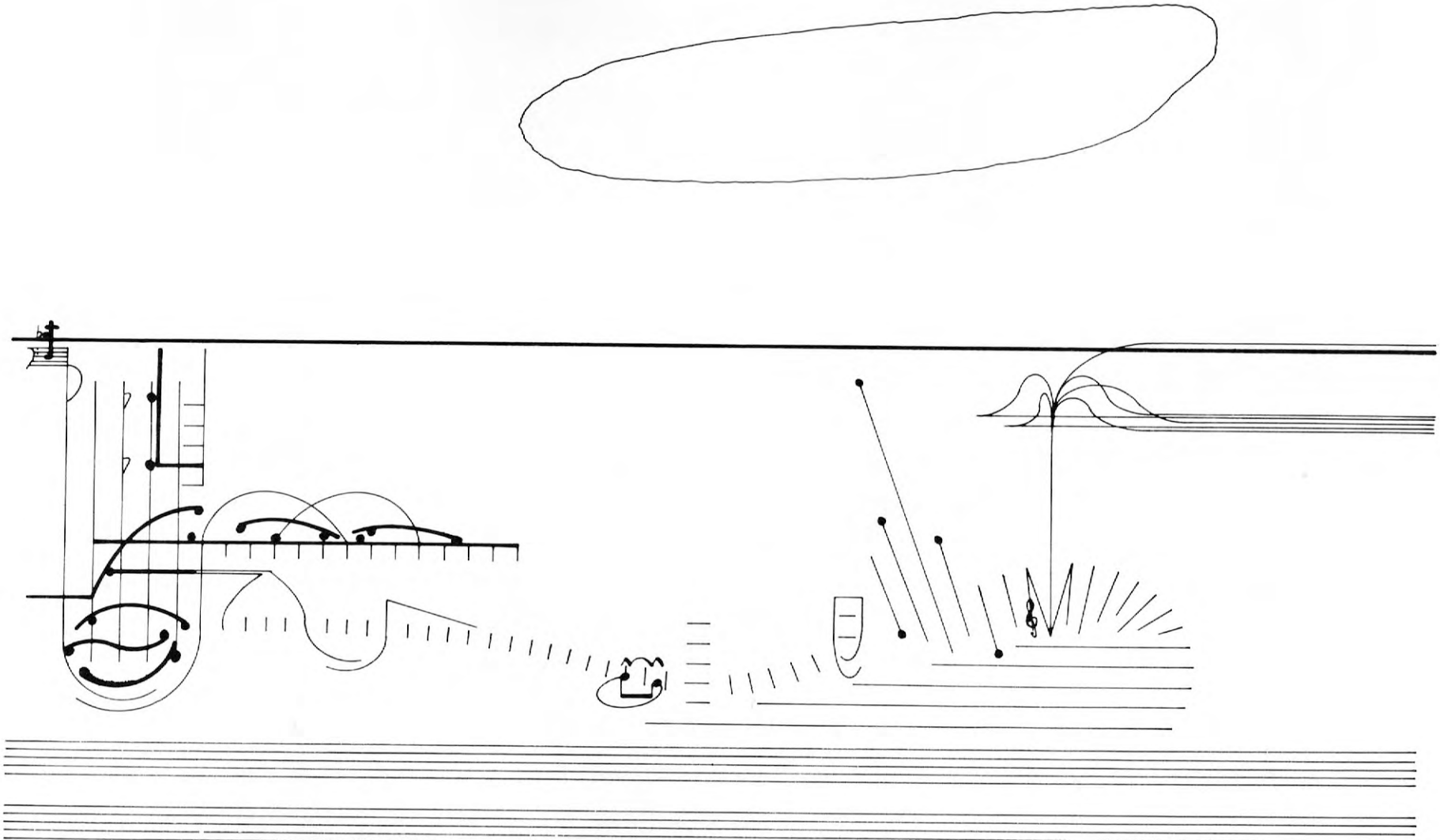

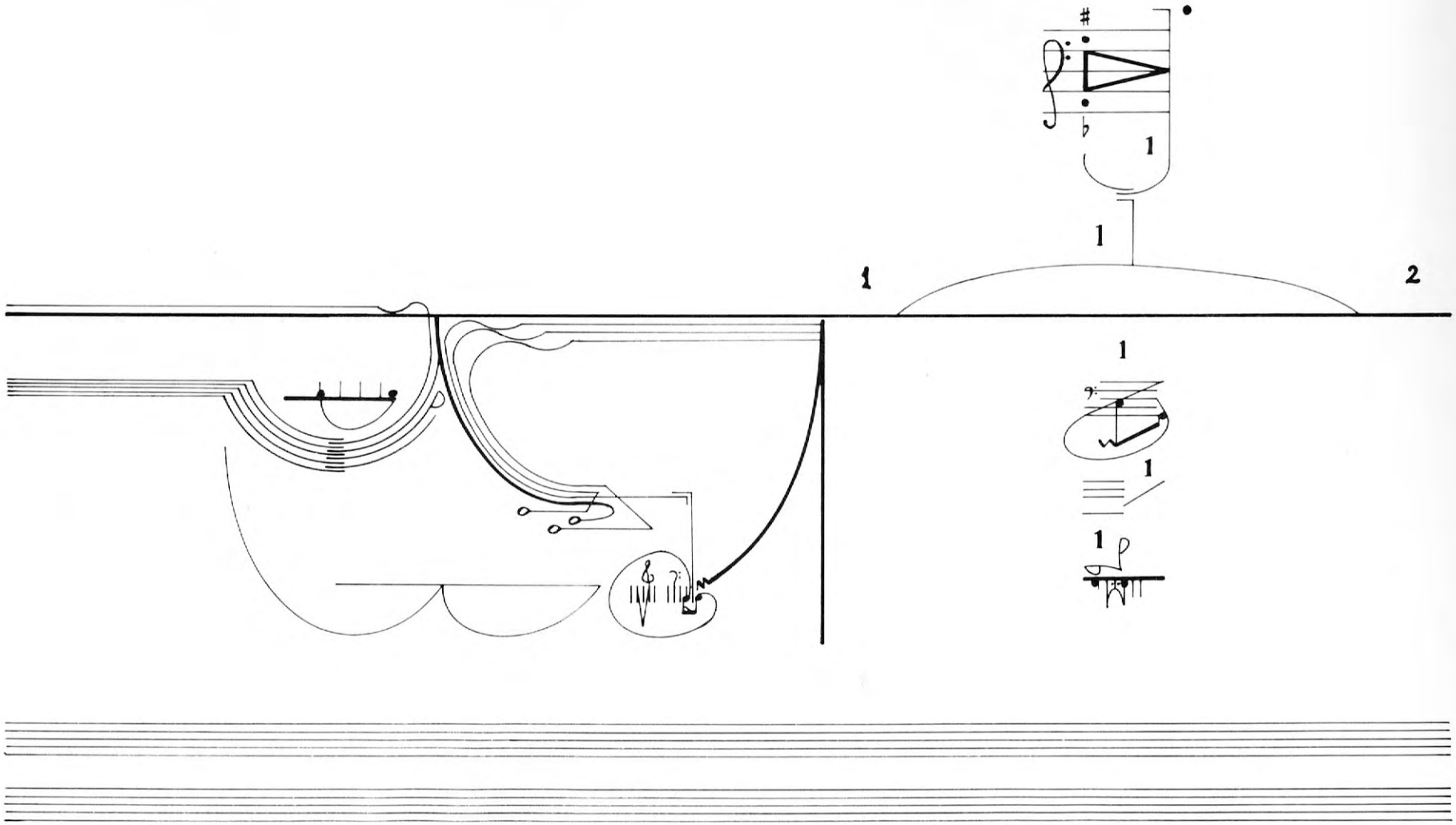
1
1
1
2
1
1
1

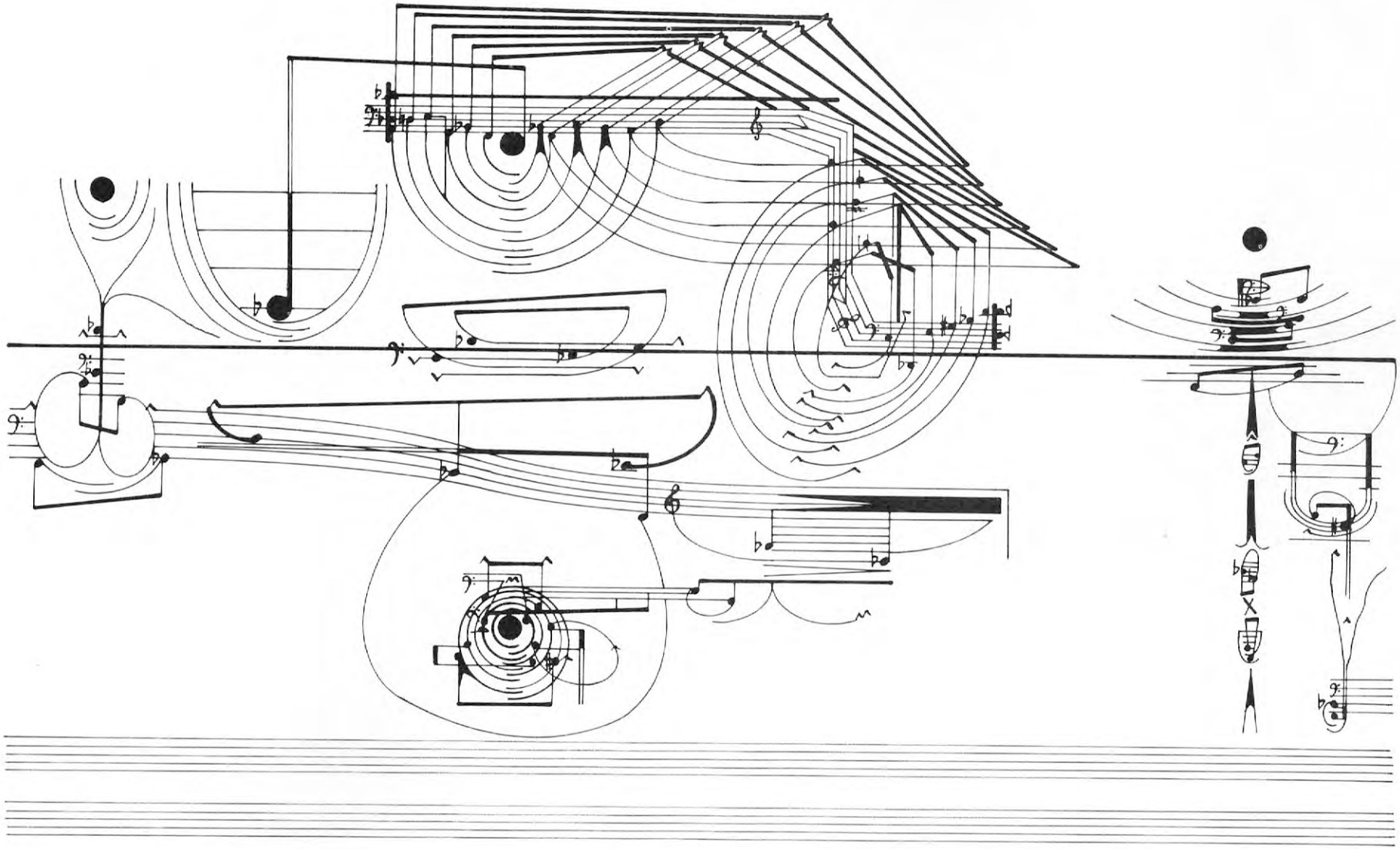

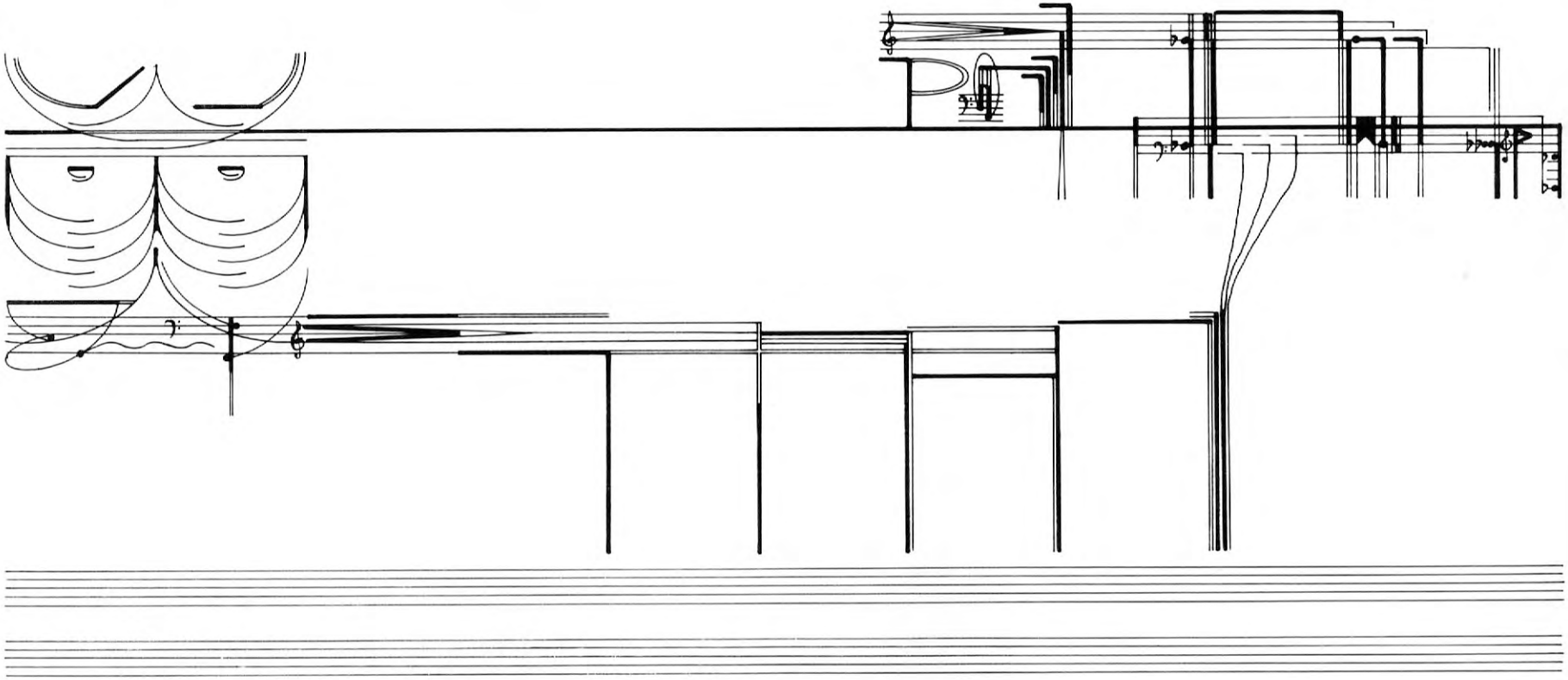

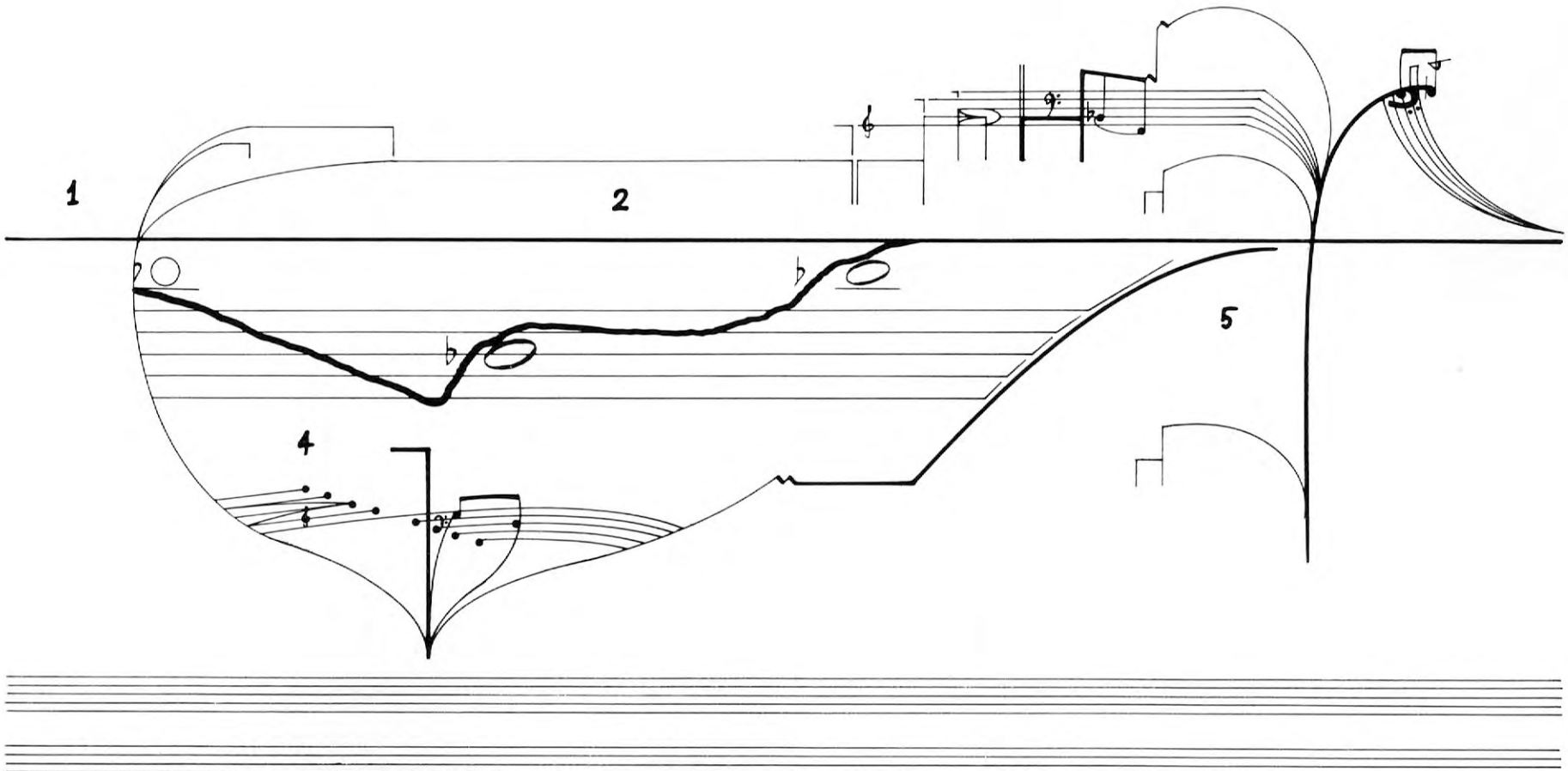
1
2
4
5

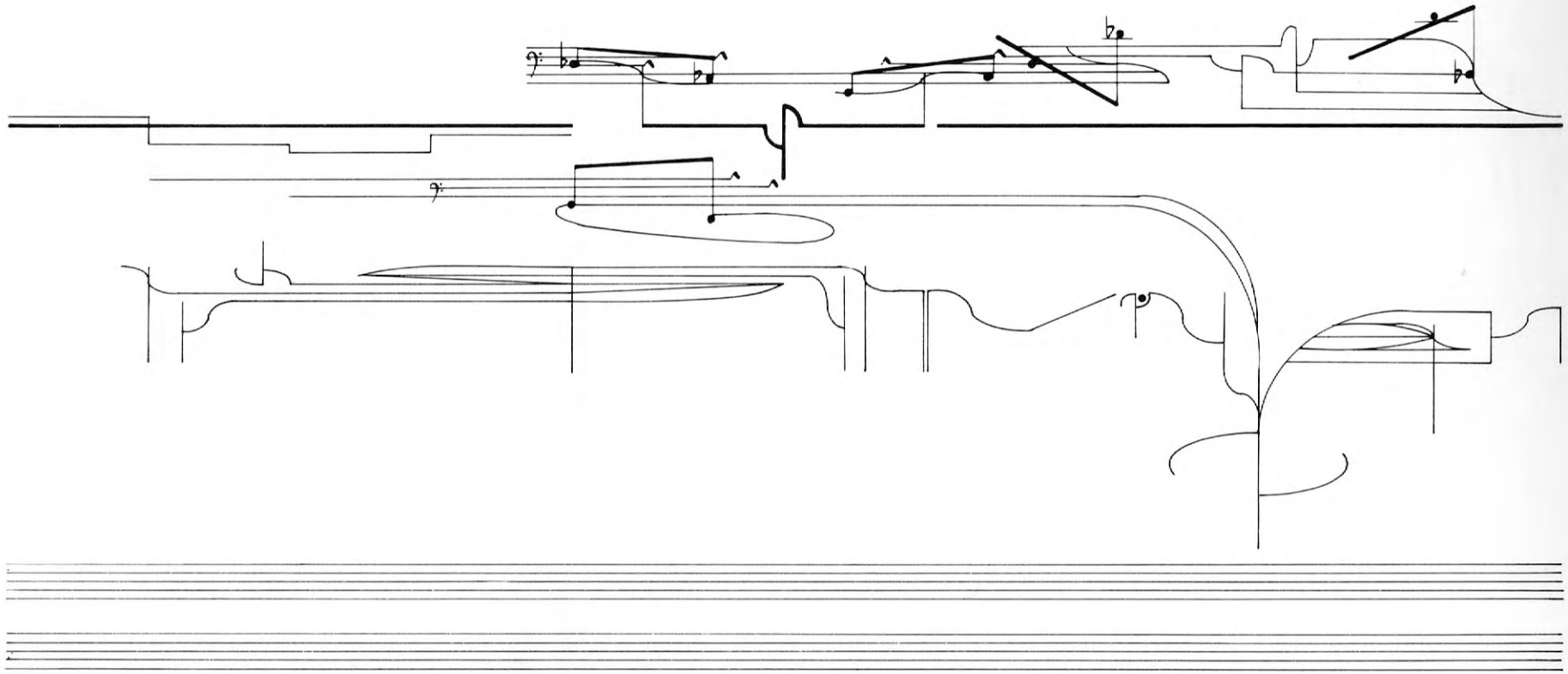

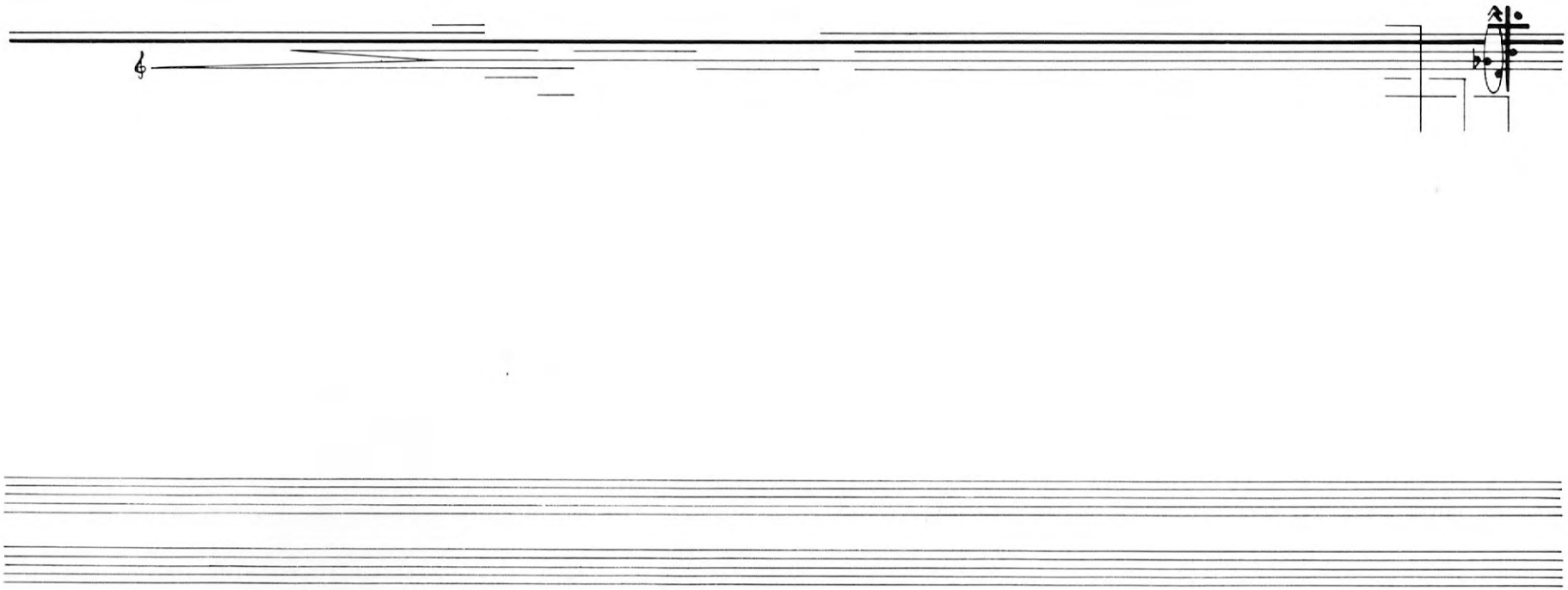

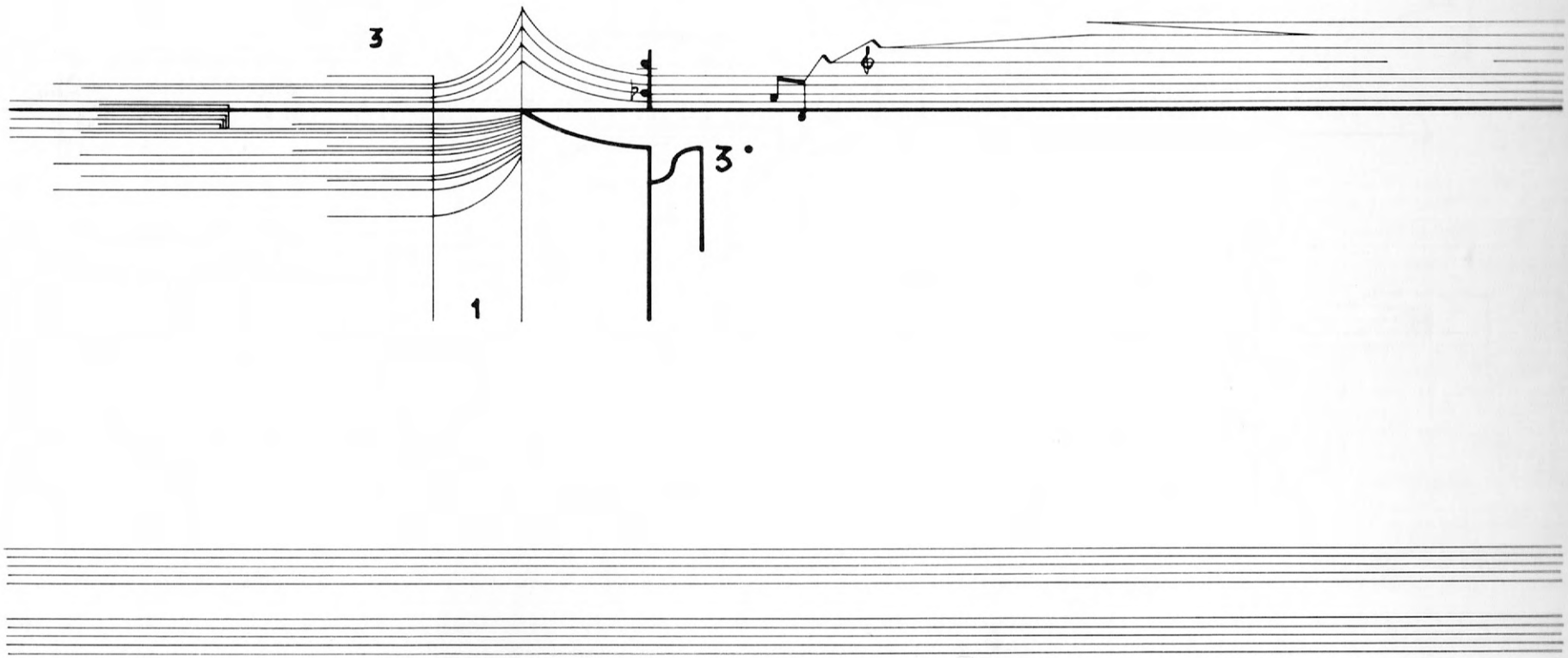
3
3°
1

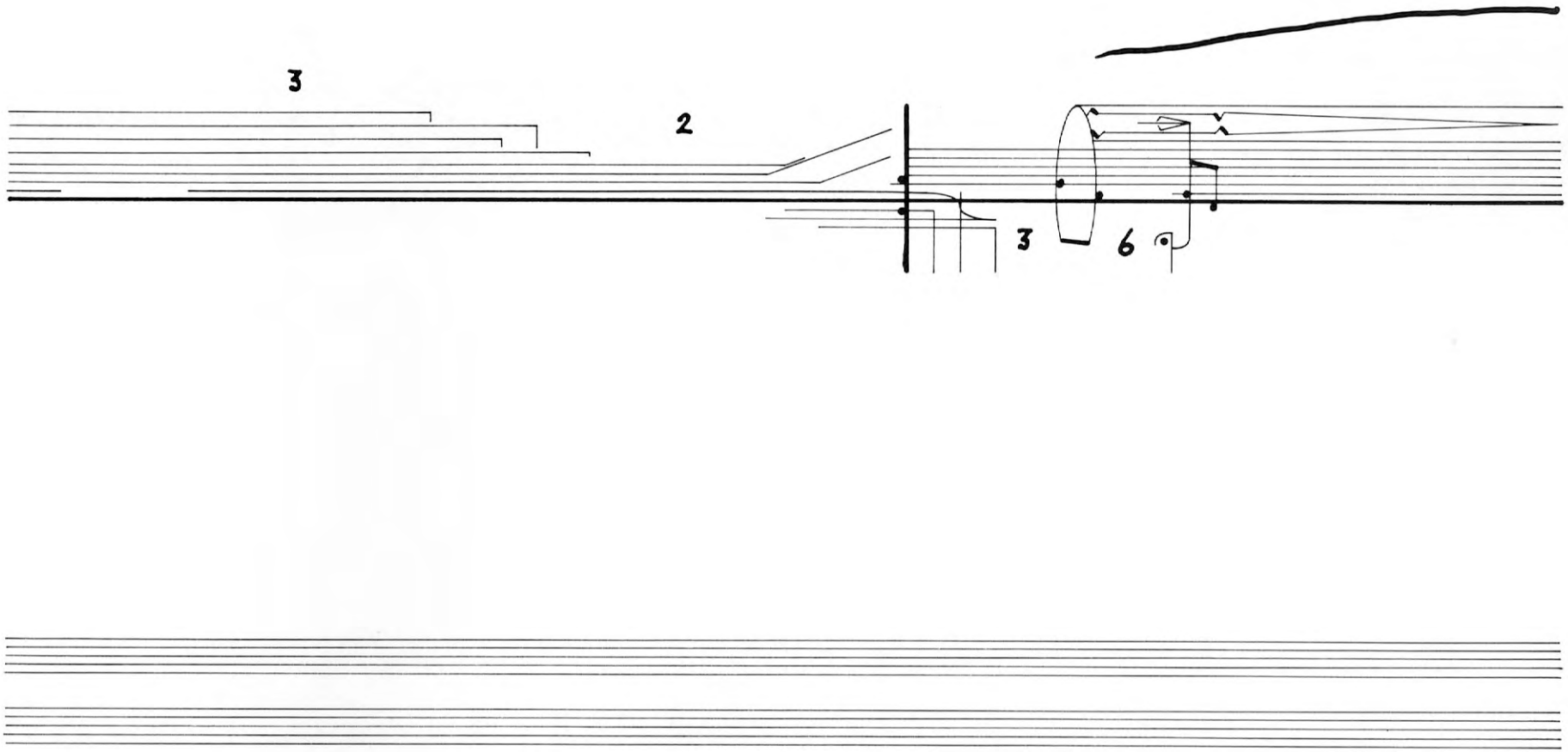
3
2
3
6

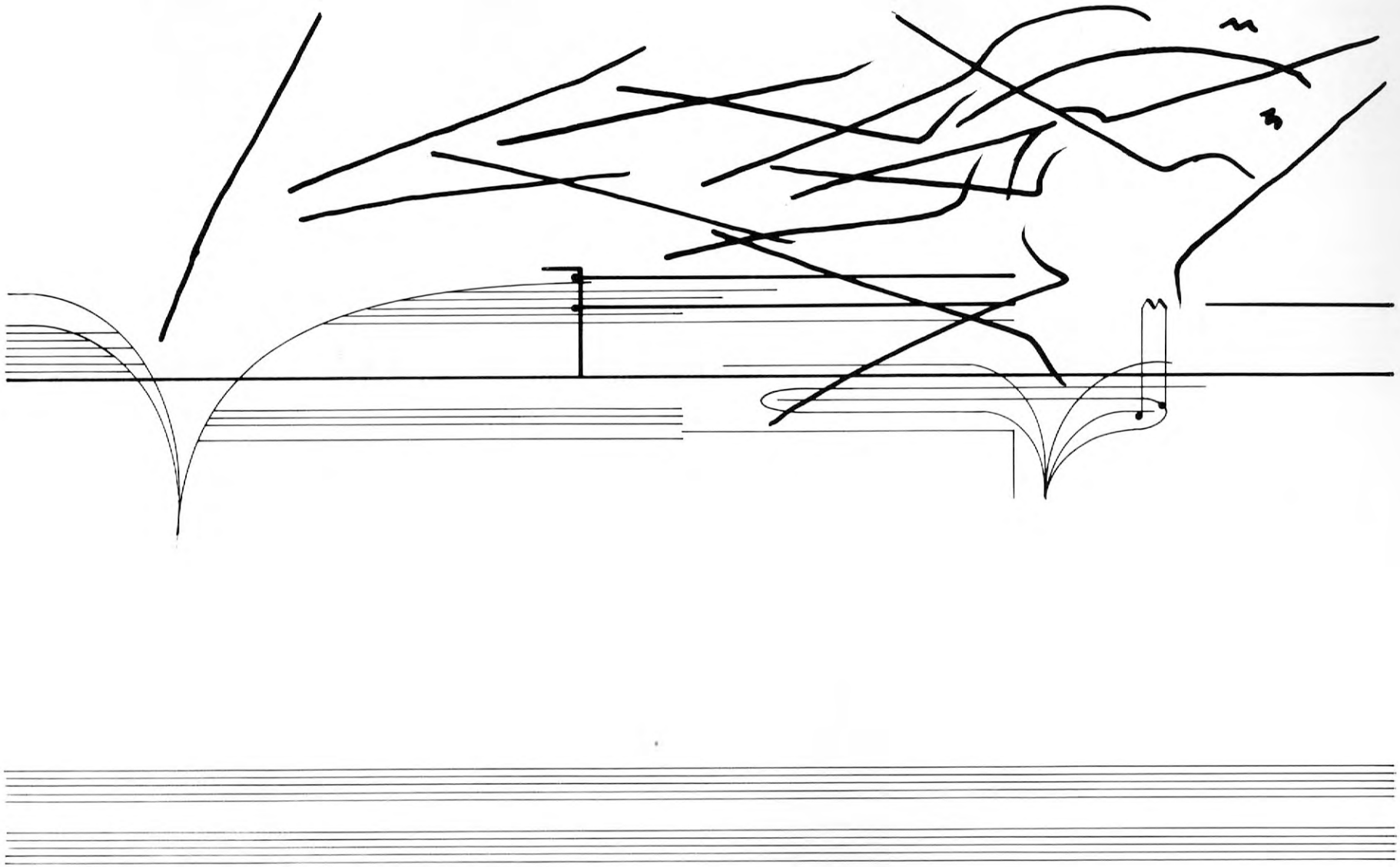

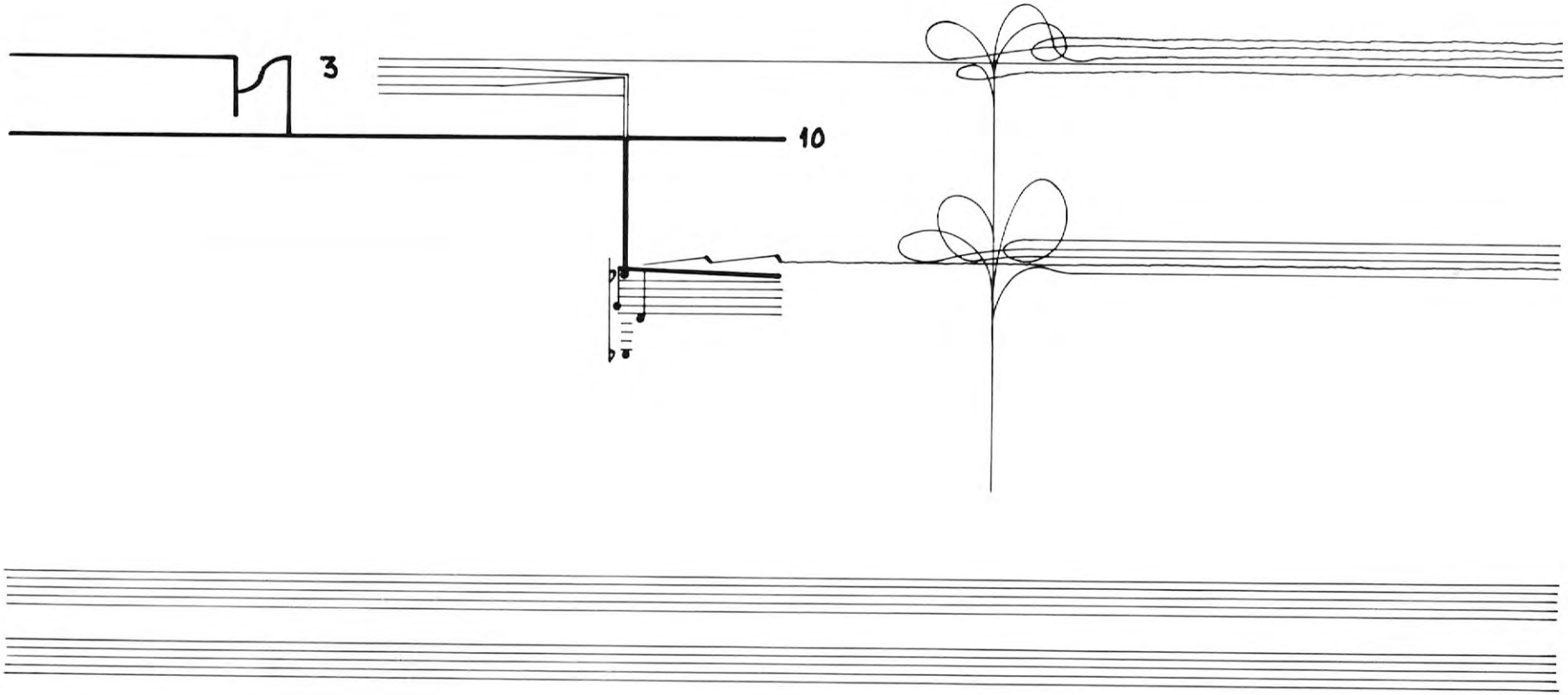
3
10

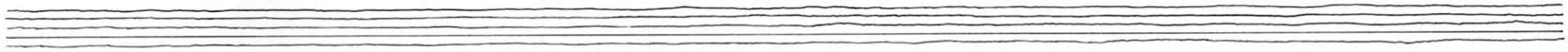
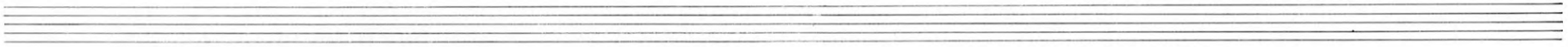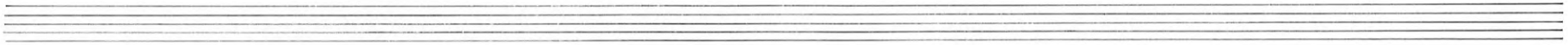
1963–67